SITE PHOTO

PROJECT : NSB- RAW LAND
SITE # : WIL02047
FA # : 12716346
PTN # : 3351A05X1H / 3351A05X1E
PACE # : MRCHI005569 / MRCHI005611
JURISDICTION : DANE COUNTY

SITE NAME : MARTINSON
ADDRESS : 4614 COUNTY HWY A
OREGON, WI 53575

AT&T MOBILITY

PROJECT INFORMATION

SITE NAME:	MARTINSON
COUNTY:	DANE
ADDRESS:	4614 COUNTY HWY A OREGON, WI 53575
ZONING DISTRICT:	A-1 (EX)
SITE NUMBER:	WIL02047
FA NUMBER:	12716346
PTN #:	3351A05X1H / 3351A05X1E
PACE:	MRCHI005569 / MRCHI005611
USID:	171920
LATITUDE:	42° 53' 54.83" N
LONGITUDE:	-89° 21' 30.08" W
GROUND OWNER:	THOMAS A. MARTINSON PHONE: (608)-279-9512
LANDLORD CONTACT:	THOMAS A. MARTINSON PHONE: (608)-279-9512
EASEMENTS OVER PROPERTY OWNER:	KENT THOMPSON (FOR JEAN E. GEFKE) PHONE: (608)-219-8320
APPLICANT:	AT&T WIRELESS 930 NATIONAL PARKWAY SCHAUMBURG, IL 60173

PROJECT CONSULTANTS

PROJECT MANAGEMENT:	SAC WIRELESS 540 W. MADISON ST. 17TH FLOOR CHICAGO, ILLINOIS 60661 CONTACT: JIM KAYSING EMAIL: JIM.KAYSING@SACW.COM
LAND SURVEYOR:	WESTCHESTER SERVICES LLC 604 FOX GLEN BARRINGTON, IL 60010 PHONE: (847)-277-0070
ARCHITECT:	SAC WIRELESS ENGINEERING GROUP 540 W. MADISON ST. 17TH FLOOR CHICAGO, ILLINOIS 60661 CONTACT: GREG PHASSOS PHONE: (312)-971-7884 EMAIL: GREG.PHASSOS@SACW.COM
AT&T CONSTRUCTION MANAGER:	RYAN WOLLENBERG PHONE: (847)-330-7559 EMAIL: RW8363@ATT.COM

SCOPE OF WORK

THIS IS NOT AN ALL INCLUSIVE LIST. CONTRACTOR SHALL UTILIZE SPECIFIED EQUIPMENT PART OR ENGINEER APPROVED EQUIVALENT. CONTRACTOR SHALL VERIFY ALL NEEDED EQUIPMENT TO PROVIDE A FUNCTIONAL SITE.
THE PROJECT GENERALLY CONSISTS OF THE FOLLOWING:
INSTALL PROPOSED AT&T MONOPOLE PER PLANS, INSTALL (6) PROPOSED AT&T PANEL ANTENNAS 2 PER SECTOR (TYP. OF 3 SECTORS), INSTALL (6) PROPOSED AT&T RRUS 2 PER SECTOR (TYP. OF 3 SECTORS), INSTALL PROPOSED AT&T 11'-5" X 12'-0" EQUIPMENT SHELTER WITH A 11'-5" X 8'-0" CONCRETE GENERATOR AREA (INSTALL GENERATOR), INSTALL PROPOSED MAIN COMPOUND H-FRAME, INSTALL (2) PROPOSED RAYCAP DC6, INSTALL PROPOSED CHAIN LINK FENCE, INSTALL PROPOSED DOUBLE SWING GATE, INSTALL PROPOSED ACCESS DRIVE, INSTALL PROPOSED GRAVEL COMPOUND, INSTALL PROPOSED ANTENNA PLATFORM COMMSCOPE MC-HP12S-12-96 OR EQUIVALENT. INSTALL (4) PROPOSED AT&T DC TRUNK LINES, INSTALL (2) PROPOSED AT&T 18 PAIR FIBER LINES, INSTALL PROPOSED DC/FIBER JUMPERS. INSTALL TRANSFORMER, FIBER PED & HAND HOLE, PER PLANS. VERIFY WITH LOCAL UTILITY COMPANY.

VICINITY MAP

LOCAL MAP

DRIVING DIRECTIONS

DIRECTIONS FROM: GENERAL MITCHELL INTERNATIONAL AIRPORT (MILWAUKEE);

DEPART GENERAL MITCHELL INTERNATIONAL ON LOCAL ROAD(S), ROAD NAME CHANGES TO SR-119 [AIRPORT SPUR], TURN OFF ONTO RAMP, TAKE RAMP (RIGHT) ONTO I-94 [US-41] I-94 / US-41 / I-894 W / MILWAUKEE, AT EXIT 316, TAKE RAMP (LEFT) ONTO I-43 [I-894] I-43 / I-894-BYP / MADISON / FOND DU LAC, KEEP LEFT ONTO I-894 [ZOO FWY] 4.4 MI I-894 / US-45, AT EXIT 1B, TAKE RAMP (LEFT) ONTO I-94/ MADISON, ROAD NAME CHANGES TO 240/ WI-30 / MADISON, AT EXIT 4A, TAKE RAMP (LEFT) ONTO I-39 [I-90] I-39 / I-90 / JANESVILLE, AT EXIT 142A, TAKE RAMP (RIGHT) ONTO US-12 [US-18] US-12 / US-18 / MADISON, AT EXIT 261A-B, KEEP RIGHT ONTO RAMP US-151 / US-14 / PARK ST / OREGON, KEEP STRAIGHT ONTO LOCAL ROAD(S), TURN LEFT (SOUTH) ONTO US-14 [US-151], TURN RIGHT (WEST) ONTO CR-A, SITE ON LEFT SIDE OF ROAD.

DRAWING INDEX

T1	TITLE SHEET
SP1	NOTES & SPECIFICATIONS
SP2	NOTES & SPECIFICATIONS
SP3	NOTES & SPECIFICATIONS
SP4	NOTES & SPECIFICATIONS
A1	SITE PLAN
A2	COMPOUND PLAN & LEGEND
A3	TOWER ELEVATION & ANTENNA PLAN
A4	SCHEDULE & CABLE NOTES
A5	ANTENNA RRUS & RAYCAP DETAILS
A5.1	DETAILS
A6	SHELTER FOUNDATION DETAILS
A7	FENCE DETAILS
A8	SITE DETAILS
A9	SHELTER PLAN AND ELEVATIONS
E1	UTILITY PLAN
E2	LEGEND AND DETAILS
E3	ELECTRICAL SLD AND PANEL SCHEDULE
E4	SHELTER GROUNDING PLAN & DETAILS
E5	GENERIC ANTENNA GROUNDING SLD & DETAILS
E6	GROUNDING DETAILS
E7	GROUNDING DETAILS
RF	RFDS PLUMBING DIAGRAM
SIGNAGE	SIGNAGE REQUIREMENTS
S1	PLAT OF SURVEY (DONE BY OTHERS)

811 Know what's below. Call before you dig.

TO OBTAIN LOCATION OF PARTICIPANTS UNDERGROUND FACILITIES BEFORE YOU DIG IN WISCONSIN, CALL LOCAL STATE ONE CALL
TOLL FREE: 1-800-242-8511 OR www.diggershotline.com
WISCONSIN STATUTE REQUIRES MIN OF 2 WORKING DAYS NOTICE BEFORE YOU EXCAVATE

CODE COMPLIANCE

- 2015 INTERNATIONAL BUILDING CODE.
- 2014 NATIONAL ELECTRICAL CODE
- TIA/EIA-222-G
- WISCONSIN STATE BUILDING CODE
- WISCONSIN STATE ELECTRICAL CODE

REFERENCE MATERIALS

- CONTRACTOR TO USE LATEST VERSION OF THE RFDS DATED 11/09/2016 WITH THE CD's PER SCOPE OF WORK.

SPECIAL NOTES

- ALL WORK SHALL BE INSTALLED IN CONFORMANCE WITH CURRENT AT&T CONSTRUCTION INSTALLATION GUIDE.
- EXISTING CONDITIONS WILL BE CHANGED & VERIFIED IN FIELD. IF SIGNIFICANT DEVIATIONS OR DETERIORATION ARE ENCOUNTERED AT THE TIME OF CONSTRUCTION, A REPAIR PERMIT WILL BE OBTAINED & CONTRACTOR SHALL NOTIFY ENGINEER IMMEDIATELY.
- THESE DRAWINGS ARE FULL SIZE & SCALEABLE ON 11"X17" SHEET SIZE.
- STATEMENT THAT COMPLIANCE WITH THE ENERGY CODE IS NOT REQUIRED. -SCOPE OF WORK DOES NOT INVOLVE MODIFICATIONS TO EXTERIOR ENVELOPE OF BUILDING, HVAC SYSTEMS OR ELECTRICAL LIGHTING.

DO NOT SCALE DRAWINGS

CONTRACTOR SHALL VERIFY PLANS & EXISTING DIMENSIONS & CONDITIONS ON THE JOB SITE & SHALL IMMEDIATELY INFORM THE ARCHITECT OR ENGINEER IN WRITING OF ANY DISCREPANCIES BEFORE PROCEEDING WITH THE WORK OR BE RESPONSIBLE FOR SAME.

WISCONSIN NESTORE POPOWYCH A-3837 CHICAGO, IL ARCHITECT

DATE: 02/20/17

"I HEREBY CERTIFY THAT THESE PLANS WERE PREPARED BY ME OR UNDER MY DIRECT SUPERVISION AND THAT I AM A DULY REGISTERED ARCHITECT UNDER THE LAWS OF THE STATE OF WISCONSIN"

at&t
930 NATIONAL PARKWAY
SCHAUMBURG, IL 60173

SAC WIRELESS
540 W. MADISON ST.
17TH FLOOR
CHICAGO, IL 60661
www.sacw.com
312.895.4977

A&E
SAC WIRELESS
540 W. MADISON ST.
17TH FLOOR
CHICAGO, IL 60661
www.sacw.com
312.895.4977

NSB- RAW LAND
12716346
MARTINSON
4614 COUNTY HWY A
OREGON, WI 53575

REVISIONS

REV.	DATE	DESCRIPTION	INITIALS
0	02/20/17	FOR CONSTRUCTION	GD
B	12/22/16	ISSUED FOR REVIEW	MI
A	12/08/16	ISSUED FOR REVIEW	MI

NOT FOR CONSTRUCTION UNLESS LABELED AS CONSTRUCTION SET

SHEET TITLE
TITLE SHEET

SHEET NUMBER
T1

THE INFORMATION CONTAINED IN THIS SET OF CONSTRUCTION DOCUMENTS IS PROPRIETARY BY NATURE. ANY USE OR DISCLOSURE OTHER THAN THAT WHICH RELATES TO CARRIER SERVICES IS STRICTLY PROHIBITED.

SAC File: T:\AE Group_ATT\AT&T 2016\NSB\Wisconsin\12716346 - WI2047-Rural Oregon\CD\12716346.AE203.90%CD's.REV0_170220.dwg 02/20/17 11:27

THE INFORMATION CONTAINED IN THIS SET OF CONSTRUCTION DOCUMENTS IS PROPRIETARY BY NATURE. ANY USE OR DISCLOSURE OTHER THAN THAT WHICH RELATES TO CARRIER SERVICES IS STRICTLY PROHIBITED.

GENERAL NOTES:

1. FOR THE PURPOSE OF CONSTRUCTION DRAWING, THE FOLLOWING DEFINITIONS SHALL APPLY:
   CONTRACTOR / CM – **SAC WIRELESS**
   SUB–CONTRACTOR – **PER TRADE**
   OWNER – **AT&T WIRELESS**
2. SITE WORK (IF APPLICABLE) SHALL BE COMPLETED AS INDICATED ON THE DRAWINGS AND PROJECT SPECIFICATIONS.
3. DRAWINGS PROVIDED HERE ARE NOT TO BE SCALED AND ARE INTENDED TO DEPICT THE DESIGN INTENT OF THE INSTALLATION.
4. ANY MATERIALS FURNISHED AND INSTALLED SHALL BE IN STRICT ACCORDANCE WITH ALL APPLICABLE CODES, REGULATIONS, AND ORDINANCES. SUBCONTRACTOR SHALL ISSUE ALL APPROPRIATE NOTICES AND COMPLY WITH ALL LAWS, ORDINANCES, RULES, REGULATIONS, AND LAWFUL ORDERS OF ANY PUBLIC AUTHORITY REGARDING THE PERFORMANCE OF THE WORK.
5. THE SUBCONTRACTOR SHALL INSTALL ALL EQUIPMENT AND MATERIALS IN ACCORDANCE WITH MANUFACTURER'S RECOMMENDATIONS UNLESS SPECIFICALLY STATED OTHERWISE.
6. IF THE SPECIFIED EQUIPMENT CANNOT BE INSTALLED AS SHOWN ON THESE DRAWINGS, THE SUBCONTRACTOR SHALL DOCUMENT & PROPOSE AN ALTERNATIVE INSTALLATION SPACE FOR APPROVAL BY THE CONTRACTOR.
7. CONTRACTOR / SUBCONTRACTOR SHALL RESTORE AND REPAIR ANY DAMAGED AREAS CAUSED BY CONSTRUCTION.
8. SUBCONTRACTOR SHALL VERIFY ALL EXISTING DIMENSIONS AND CONDITIONS PRIOR TO COMMENCING ANY WORK. ALL DIMENSIONS OF EXISTING CONSTRUCTION SHOWN ON THE DRAWINGS MUST BE VERIFIED. SUBCONTRACTOR SHALL NOTIFY THE CONTRACTOR OF ANY DISCREPANCIES PRIOR TO PROCEEDING WITH CONSTRUCTION. CONTRACTOR SHALL VERIFY EXISTING BURIED AND OVERHEAD UTILITIES PRIOR TO EXCAVATION. CONTRACTOR SHALL REPAIR ANY UTILITIES DAMAGED DURING THE COURSE OF CONSTRUCTION AND COORDINATE ANY REPAIRS WITH UTILITY COMPANY.
9. N /A
10. N/A
11. SUBCONTRACTOR SHALL LEGALLY AND PROPERLY DISPOSE OF ALL SCRAP MATERIALS SUCH AS COAXIAL CABLES AND OTHER ITEMS REMOVED FROM THE EXISTING FACILITY.

SITE PREPARATION:

SUB–CONTRACTOR'S SCOPE OF WORK

1. PROTECTION OF EXISTING TREES,VEGETATION AND LANDSCAPING MATERIALS WHICH MIGHT BE DAMAGED BY CONSTRUCTION ACTIVITIES.
2. CLEARING AND GRUBBING OF STUMPS, VEGETATION, DEBRIS, RUBBISH, DESIGNATED TREES, AND SITE IMPROVEMENTS.
3. TOPSOIL STRIPPING AND STOCKPILING.
4. TEMPORARY PROTECTION OF ADJACENT PROPERTY, STRUCTURES, BENCHMARKS, AND MONUMENTS.

SUB–CONTRACTORS QUALITY ASSURANCE

1. SUB–CONTRACTOR SHALL BE COMPLETELY RESPONSIBLE FOR CONTAINMENT OF SEDIMENT AND CONTROL OF EROSION ON SITE, ANY DAMAGE TO ADJACENT OR DOWNSTREAM PROPERTIES WILL BE CORRECTED BY THE SUB–CONTRACTOR AT NO EXPENSE TO THE OWNER.
2. SUB–CONTRACTOR SHALL MAINTAIN ADEQUATE DRAINAGE AT ALL TIMES. DO NOT ALLOW WATER TO STAND OR POND. ANY DAMAGE TO STRUCTURES OR WORK ON SITE CAUSED BY INADEQUATE MAINTENANCE OF DRAINAGE WILL BE THE RESPONSIBILITY OF THE SUB–CONTRACTOR AND COST ASSOCIATED WITH REPAIRS FOR SUCH DAMAGE WILL BE AT THE SUB–CONTRACTORS EXPENSE.

SITE WORK:

EARTHWORK AND DRAINAGE

PART 1 – GENERAL

1. WORK INCLUDED: SEE SITE PLAN.

2. DESCRIPTIONS

ACCESS DRIVE W/ TURNAROUND AREA, LEASE AREA, AND IF APPLICABLE UNDERGROUND UTILITY EASEMENTS ARE TO BE CONSTRUCTED TO PROVIDE A WELL DRAINED, EASILY MAINTAINED, EVEN SURFACE FOR MATERIAL AND EQUIPMENT DELIVERIES AND MAINTENANCE PERSONNEL ACCESS.

3. QUALITY ASSURANCE

A. APPLY SOIL STERILIZER IN ACCORDANCE WITH MANUFACTURER'S RECOMMENDATIONS (AS NEEDED).
B. APPLY AND MAINTAIN GRASS SEED AS RECOMMENDED BY THE SEED PRODUCER (IF REQUIRED).
C. PLACE AND MAINTAIN VEGETATION LANDSCAPING, IF INCLUDED WITHIN THE CONTRACT, AS RECOMMENDED BY NURSERY INDUSTRY STANDARDS.

4. SEQUENCING

A. CONFIRM SURVEY STAKES AND SET ELEVATION STAKES PRIOR TO ANY CONSTRUCTION.
B. COMPLETELY GRUB THE ACCESS DRIVE W/ TURNAROUND, UNDERGROUND UTILITY EASEMENTS, (IF APPLICABLE) AND LEASE AREA PRIOR TO FOUNDATION CONSTRUCTION, PLACEMENT OF BACKFILL AND SUB–BASE MATERIAL.
C. CONSTRUCT TEMPORARY CONSTRUCTION AREA ALONG ACCESS DRIVE.
D. BRING THE LEASE AREA AND ACCESS DRIVE W/ TURNAROUND TO BASE COURSE ELEVATION PRIOR TO INSTALLING FOUNDATION.
E. APPLY SOIL STERILIZER PRIOR TO PLACING BASE MATERIALS.
F. GRADE, SEED, FERTILIZE, AND MULCH ALL AREAS DISTURBED BY CONSTRUCTION (INCLUDING UNDERGROUND UTILITY EASEMENTS) IMMEDIATELY AFTER BRINGING LEASE AREA AND ACCESS DRIVE W/ TURNAROUND TO BASE COURSE ELEVATION, WATER TO ENSURE GROWTH.
G. REMOVE GRAVEL FROM TEMPORARY CONSTRUCTION ZONE TO AN AUTHORIZED AREA OR AS DIRECTED BY PROJECT MANAGER.
H. AFTER APPLICATIONS OF FINAL SURFACES, APPLY SOIL STERILIZER TO STONE SURFACES.

5. SUBMITTALS

A. BEFORE CONSTRUCTION IF LANDSCAPING IS APPLICABLE TO THE CONTRACT, SUBMIT TWO COPIES OF THE LANDSCAPE PLAN UNDER NURSERY LETTERHEAD. IF A LANDSCAPE ALLOWANCE WAS INCLUDED IN THE CONTRACT, PROVIDE AN ITEMIZED LISTING OF PROPOSED COSTS ON NURSERY LETTERHEAD (REFER TO PLANS FOR LANDSCAPING REQUIREMENTS).

B. AFTER CONSTRUCTION
1. MANUFACTURER'S DESCRIPTION OF PRODUCT AND WARRANTY STATEMENT ON SOIL STERILIZED.
2. MANUFACTURER'S DESCRIPTION OF PRODUCT ON GRASS SEED AND FERTILIZER
3. LANDSCAPING WARRANTY STATEMENT.

6. WARRANTY

A. IN ADDITION TO THE WARRANTY ON ALL CONSTRUCTION COVERED IN THE CONTRACT DOCUMENTS, THE CONTRACTOR SHALL REPAIR ALL DAMAGE AND RESTORE AREA AS CLOSE TO ORIGINAL CONDITION AS POSSIBLE AT SITE AND SURROUNDINGS.
B. SOIL STERILIZATION APPLICATION TO GUARANTEE VEGETATION FREE ROAD AND SITE AREAS FOR ONE YEAR FROM DATE OF FINAL INSPECTION.
C. DISTURBED AREAS WILL REFLECT GROWTH OF NEW GRASS COVER PRIOR TO FINAL INSPECTION.
D. LANDSCAPING, IF INCLUDED WITHIN THE SCOPE OF THE CONTRACT, WILL BE GUARANTEED FOR ONE YEAR FROM DATE OF FINAL INSPECTION.

PART 2 – PRODUCTS

1. MATERIALS

A. SOIL STERILIZER SHALL BE EPA–REGISTERED, PRE–EMERGENCE LIQUID:

TOTAL KILL PRODUCT 910 EPA 10292–7
PHASAR CORPORATION P.O. BOX 5123 DEARBORN, MI 48128 (313) 563–8000
AMBUSH HERBICIDE EPA REGISTERED
FRAMAR INDUSTRIAL PRODUCTS 1435 MORRIS AVE. UNION, NJ 07083 (800) 526–4924

B. ROAD AND SITE MATERIALS SHALL CONFORM TO TDOT SPECIFICATIONS FILL MATERIAL (UNLESS OTHERWISE NOTED) – ACCEPTABLE SELECT FILL SHALL BE IN ACCORDANCE WITH STATE DEPARTMENT OF HIGHWAY AND TRANSPORTATION STANDARD SPECIFICATIONS.

C. SOIL STABILIZER FABRIC SHALL BE MIRAFI – 500X.

PART 3 – EXECUTION

1. INSPECTIONS

LOCAL BUILDING INSPECTORS SHALL BE NOTIFIED NO LESS THAN 48 HOURS IN ADVANCE OF CONCRETE POURS, UNLESS OTHERWISE SPECIFIED BY JURISDICTION.

2. PREPARATION

A. CLEAR TREES, BRUSH AND DEBRIS FROM LEASE AREA, ACCESS DRIVE W/ TURN–AROUND AND UNDER GROUND UTILITY EASEMENTS AS REQUIRED FOR CONSTRUCTION.
B. PRIOR TO OTHER EXCAVATION AND CONSTRUCTION, GRUB ORGANIC MATERIAL TO A MINIMUM OF SIX (6) INCHES BELOW GRADE.
C. UNLESS OTHERWISE INSTRUCTED BY AT&T, TRANSPORT ALL REMOVED TREES, BRUSH AND DEBRIS FROM THE PROPERTY TO AN AUTHORIZED LANDFILL.
D. PRIOR TO PLACEMENT OF FILL OR BASE MATERIALS, ROLL THE SOIL.
E. WHERE UNSTABLE SOIL CONDITIONS ARE ENCOUNTERED, LINE THE AREAS WITH STABILIZER MAT PRIOR TO PLACEMENT OF FILL OR BASE MATERIAL.

3. INSTALLATION

A. GRADE OR FILL THE LEASE AREA AND ACCESS DRIVE W/ TURNAROUND AS REQUIRED IN ORDER THAT UPON DISTRIBUTION OF SPOILS, RESULTING FROM EXCAVATIONS, THE RESULTING GRADE WILL CORRESPOND WITH SAID SUB–BASE COURSE. ELEVATIONS ARE TO BE CALCULATED FROM BENCHMARK, FINISHED GRADES, OR INDICATED SLOPES.
B. CLEAR EXCESS SPOILS, IF ANY, FROM JOB SITE AND DO NOT SPREAD BEYOND THE LIMITS OF PROJECT AREA UNLESS AUTHORIZED BY PROJECT MANAGER AND AGREED TO BY LANDOWNER.
C. BRING THE ACCESS DRIVE W/ TURNAROUND TO BASE COURSE ELEVATION TO FACILITATE CONSTRUCTION AND OBSERVATION DURING CONSTRUCTION OF THE SITE.
D. AVOID CREATING DEPRESSIONS WHERE WATER MAY POND.
E. THE CONTRACT SHALL INCLUDE GRADING, BANKING, AND DITCHING, UNLESS OTHERWISE INDICATED.
F. WHEN IMPROVING AN EXISTING ACCESS DRIVE, GRADE THE EXISTING DRIVE TO REMOVE ANY ORGANIC MATTER AND SMOOTH THE SURFACE BEFORE PLACING FILL OR STONE.
G. PLACE FILL OR STONE IN SIX (6) INCH MAXIMUM LIFTS, AND COMPACT BEFORE PLACING NEXT LIFT.
H. THE TOP SURFACE COURSE, SHALL EXTEND A MINIMUM OF ONE (1) FOOT BEYOND THE SITE FENCE (UNLESS OTHERWISE NOTED) AND SHALL COVER THE AREA AS INDICATED.
I. APPLY RIPRAP TO THE SIDE SLOPES OF ALL FENCED SITE AREAS, PARKING AREAS, AND ALL OTHER SLOPES GREATER THAN 2:1.
J. APPLY RIPRAP TO THE SIDES OF DITCHES OR DRAINAGE SWALES.
K. RIPRAP ENTIRE DITCH FOR SIX (6) FEET IN ALL DIRECTIONS AT CULVERT OPENINGS.
L. APPLY SEED, FERTILIZER, AND STRAW COVER TO ALL OTHER DISTURBED AREAS, DITCHES, AND DRAINAGE SWALES, NOT OTHERWISE RIPRAPPED.
M. UNDER NO CIRCUMSTANCES WILL DITCHES, SWALES, OR CULVERTS BE PLACED SO THAT THEY DIRECT WATER TOWARDS, OR PERMIT STANDING WATER IMMEDIATELY ADJACENT TO SHELTER OR EQUIPMENT. IF DESIGNS OR ELEVATIONS ARE IN CONFLICT WITH THIS, ADVISE CONSTRUCTION MANAGER IMMEDIATELY.
N. IN DITCHES WITH SLOPES GREATER THAN 10%, MOUND DIVERSIONARY HEADWALLS IN THE DITCH AT CULVERT ENTRANCES. POSITION THE HEADWALL AT AN ANGLE NO GREATER THAT 60 DEGREES OFF THE DITCH LINE. RIPRAP THE UPSTREAM SIDE OF THE HEADWALL AS WELL AS THE DITCH FOR SIX (6) FEET ABOVE THE CULVERT ENTRANCE.
O. APPLY SEED AND FERTILIZER TO SURFACE CONDITIONS WHICH WILL ENCOURAGE ROOTING. RAKE AREAS TO BE SEEDED TO EVEN THE SURFACE AND LOOSEN THE SOIL.
P. SOW SEED IN TWO DIRECTIONS IN THE QUANTITY RECOMMENDED BY THE SEED PRODUCER.

WISCONSIN
NESTOR POPOWYCH
A-3837
CHICAGO, IL
ARCHITECT

DATE: 02/20/17

"I HEREBY CERTIFY THAT THESE PLANS WERE PREPARED BY ME OR UNDER MY DIRECT SUPERVISION AND THAT I AM A DULY REGISTERED ARCHITECT UNDER THE LAWS OF THE STATE OF WISCONSIN"

at&t
930 NATIONAL PARKWAY
SCHAUMBURG, IL 60173

SAC WIRELESS
540 W. MADISON ST.
17TH FLOOR
CHICAGO, IL 60661
www.sacw.com
312.895.4977

A&E
SAC WIRELESS
540 W. MADISON ST.
17TH FLOOR
CHICAGO, IL 60661
www.sacw.com
312.895.4977

NSB– RAW LAND
12716346
MARTINSON
4614 COUNTY HWY A
OREGON, WI 53575

REVISIONS

REV.	DATE	DESCRIPTION	INITIALS
0	02/20/17	FOR CONSTRUCTION	GD
B	12/22/16	ISSUED FOR REVIEW	MI
A	12/08/16	ISSUED FOR REVIEW	MI

NOT FOR CONSTRUCTION UNLESS LABELED AS CONSTRUCTION SET

SHEET TITLE
NOTES & SPECIFICATIONS

SHEET NUMBER
SP1

Q. ENSURE GROWTH OF SEEDED AND LANDSCAPED AREAS, BY WATERING, UP TO THE POINT OF RELEASE FROM THE CONTRACT. CONTINUE TO REWORK THE BARE AREAS UNTIL COMPLETE COVERAGE IS OBTAINED.

4. FIELD QUALITY CONTROL

COMPACT SOILS TO MAXIMUM DENSITY IN ACCORDANCE WITH ASTM D-1557. AREAS OF SETTLEMENT WILL BE EXCAVATED AND REFILLED AT CONTRACTOR'S EXPENSE. INDICATE PERCENTAGE OF COMPACTION ACHIEVED ON AS-BUILT DRAWINGS.

5. PROTECTION

A. PROTECT SEEDED AREAS FROM EROSION BY SPREADING STRAW TO A UNIFORM LOOSE DEPTH OF 1-2 INCHES, STAKE AND TIE DOWN AS REQUIRED. USE OF EROSION CONTROL MESH OR MULCH NET WILL BE AN ACCEPTABLE ALTERNATE.
B. ALL TREES PLACED IN CONJUNCTION WITH A LANDSCAPE CONTRACT WILL BE WRAPPED, TIED WITH HOSE PROTECTED WIRE, AND SECURED TO 2" X 2" X 4'-0" WOODEN STAKES EXTENDING TWO-FEET INTO THE GROUND ON FOUR SIDES OF THE TREE.
C. PROTECT ALL EXPOSED AREAS AGAINST WASHOUTS AND SOIL EROSION. PLACE STRAW BALES AT THE INLET APPROACH TO ALL NEW OR EXISTING CULVERTS. WHERE THE SITE OR ROAD AREAS HAVE BEEN ELEVATED IMMEDIATELY ADJACENT TO THE RAIL LINE, STAKE EROSION CONTROL FABRIC FULL LENGTH IN THE SWALE TO PREVENT CONTAMINATION OF THE RAIL BALLAST. ALL EROSION CONTROL METHODS SHALL CONFORM TO APPLICABLE BUILDING CODE REQUIREMENTS.

TRENCHING:

MATERIALS SUB-CONTRACTOR SHALL:

1. FILL MATERIAL SHALL BE OBTAINED TO THE MAXIMUM EXTENT POSSIBLE FROM EXCAVATIONS ON SITE. THE STRUCTURAL FILL SHOULD BE SAND AND SHALL BE APPROVED BY THE CONSTRUCTION MANAGER AND SHALL CONFORM TO LOCAL GOVERNING JURISDICTION AND UTILITY COMPANY REQUIREMENTS. THE FILL MATERIAL SHALL CONTAIN NO ORGANIC MATERIAL, ROCKS, OR OBJECTIONABLE MATERIALS AND/OR MATERIALS DESIGNATED AS HAZARDOUS OR INDUSTRIAL BY THE EPA. THE FILL MATERIAL SHALL CONTAIN FINES SUFFICIENT TO FILL ALL VOIDS IN THE MATERIAL. BACKFILL OR BORROW SOIL SHALL BE PLACED IN 6" LOOSE LIFTS.

PIPE DETECTION AND IDENTIFICATION SUB-CONTRACTOR SHALL:

1. UTILIZE WARNING TAPE. ALL UTILITY SERVICE TRENCHES SHALL BE MARKED WITH WARNING TAPE.

TRENCH EXCAVATION SUB-CONTRACTOR SHALL:

1. DIG TRENCH TO LINES AND GRADES SHOWN ON THE PLANS OR AS DIRECTED BY THE CONSTRUCTION MANAGER.
2. TRENCH LENGTH SHALL BE SUFFICIENT TO ALLOW FOR SATISFACTORY CONSTRUCTION AND INSPECTION OF THE PROJECT WITHOUT ENDANGERING OTHER CONSTRUCTION WORK OR ADJACENT FACILITIES.
3. DISPOSAL OF EXCESS AND UNSUITABLE EXCAVATION MATERIAL PROPERLY AS DIRECTED BY THE CONSTRUCTION MANAGER.
4. USE HAND TRENCHING METHODS FOR EXCAVATION THAT CANNOT BE ACCOMPLISHED WITHOUT ENDANGERING EXISTING OR NEW STRUCTURES AND OTHER FACILITIES.

TRENCH PROTECTION SUB-CONTRACTOR SHALL:

1. PROVIDE MATERIALS, LABOR, AND EQUIPMENT NECESSARY TO PROTECT TRENCHES AT ALL TIMES.
2. SHEETING AND BRACING TO MEET OR EXCEED OSHA REQUIREMENTS.

BACKFILLING SUB-CONTRACTOR SHALL:

1. NOTIFY THE CONSTRUCTION MANAGER AT LEAST 24 HOURS IN ADVANCE OF BACKFILLING.
2. BACKFILL TRENCH WITH LIFTS UP TO 6" LOOSE MEASURE.
3. PROTECT CONDUIT FROM LATERAL MOVEMENT AND DAMAGE FROM IMPACT OR UNBALANCED LOADING TO AVOID DISPLACEMENT OF CONDUIT AND/OR STRUCTURES. DO NOT FREE FALL BACKFILL INTO TRENCH UNTIL AT LEAST 6" OF COVER IS OVER CONDUIT.

COMPACTION SUB-CONTRACTOR SHALL:

1. COMPACT BACKFILL TO 95% MAXIMUM DRY DENSITY AS DETERMINED BY ASTM D-1557 WITH PLUS OR MINUS 3% OF OPTIMUM MOISTURE CONTENT.
2. IF REQUIRED COMPACTION DENSITY HAS NOT BEEN OBTAINED REMOVE THE BACKFILL FROM THE TRENCH OR STRUCTURE, REPLACE WITH APPROVED BACKFILL AND RE-COMPACT AS SPECIFIED.
3. ANY SUBSEQUENT SETTLEMENT OF TRENCH OR STRUCTURE BACKFILL DURING THE MAINTENANCE PERIOD SHALL BE CONSIDERED THE RESULT OF IMPROPER COMPACTION AND SHALL PROMPTLY CORRECTED.

FENCING AND GATE(S)

PART 1 - GENERAL

1. WORK INCLUDED SEE PLAN FOR SITE AND LOCATION OF FENCE AND GATE(S).
2. QUALITY ASSURANCE ALL STEEL MATERIALS UTILIZED IN CONJUNCTION WITH THIS SPECIFICATION WILL BE GALVANIZED OR STAINLESS STEEL. WEIGHT OF ZINC COATING ON THE FABRIC SHALL NOT BE LESS THAN 12 OUNCES PER SQUARE FOOT OF MATERIAL COVERED. POSTS SHALL BE HOT-DIPPED IN GRADE 'E' ZINC, 18 OUNCES PER SQUARE FOOT.
3. SEQUENCING IF THE SITE AREA HAS BEEN BROUGHT UP TO SURFACE COURSE ELEVATION (PRIOR TO THE FENCE CONSTRUCTION), FENCE POST EXCAVATION SPOILS MUST BE CONTROLLED TO PRECLUDE CONTAMINATION OF SAID SURFACE COURSE.
4.SUBMITTALS
A. MANUFACTURER'S DESCRIPTIVE LITERATURE.
B. CERTIFICATE OR STATEMENT OF COMPLIANCE WITH THE SPECIFICATIONS.

PART 2 - PRODUCTS

1. FENCE MATERIAL
A. ALL FABRIC WIRE, RAILS, HARDWARE, AND OTHER STEEL MATERIALS SHALL BE HOT-DIPPED GALVANIZED.
B. FABRIC SHALL BE SIX-FOOT HIGH TWO-INCH CHAIN LINK MESH OF NO. 9 GAUGE (0.148") WIRE. THE FABRIC SHALL HAVE A KNUCKLED FINISH FOR THE TOP SELVAGES. FABRIC SHALL CONFORM TO THE SPECIFICATIONS OF ASTM A-392 CLASS 1.
C. BARBED WIRE SHALL BE DOUBLE-STRAND, 12-1/2 GAUGE TWISTED WIRE, WITH 14-GAUGE, 4-POINT ROUND BARBS SPACED ON FIVE-INCH CENTERS.
D. ALL POSTS SHALL BE SCHEDULE - 40 MECHANICAL SERVICE PIPE AND SHALL BE TYPE 1 ASTM A-128 AND OF THE FOLLOWING DIAMETER POST 2" SCHEDULE 40 (2 3/8" O.D.) CORNER 3" SCHEDULE 40 (3 1/2" O.D.) GATE 3" SCHEDULE 40 (3 1/2" O.D.)
E. GATE POSTS SHALL BE EXTENDED 12 INCHES, INCLUDING DOME CAP, TO PROVIDE FOR ATTACHMENT OF BARBED WIRE.
F. ALL TOP AND BRACE RAILS SHALL BE $1\frac{1}{2}$" DIAMETER SCHEDULE - 40 MECHANICAL-SERVICE PIPE.
G. GATE FRAMES AND BRACES SHALL BE 1.90 INCH DIAMETER SCHEDULE 40 MECHANICAL-SERVICE PIPE. FRAMES SHALL HAVE WELDED CORNERS.
H. GATE FRAMES SHALL HAVE A FULL-HEIGHT VERTICAL BRACE, AND A FULL-WIDTH HORIZONTAL BRACE, SECURED IN PLACE BY USE OF GATE BRACE CLAMPS.
I. GATE HINGES SHALL BE MERCHANTS METAL MODEL 64386 HINGE ADAPTER WITH MODEL 6409, 188-DEGREE ATTACHMENT.
J. THE GUIDE (LATCH ASSEMBLY) SHALL BE HEAVY INDUSTRIAL DOUBLE GATE LATCH. SEE DETAIL.
K. LATCHES AND STOPS SHALL BE PROVIDED FOR ALL GATES.
L. PLUNGER ROD COMPLETE WITH RECEPTOR TO BE PROVIDED AT THE INACTIVE LEAF OF ALL DOUBLE GATE INSTALLATIONS.
M. ALL STOPS SHALL HAVE KEEPERS CAPABLE OF HOLDING THE GATE LEAF IN THE OPEN POSITION
N. A NO. 7 GAUGE ZINC COATED TENSION WIRE SHALL BE USED AT THE BOTTOM OF THE FABRIC, TERMINATED WITH BAND CLIPS AT CORNER AND GATE POSTS.
ATOP EACH LINE/CORNER POST.
O. A SIX-INCH BY 1/2-INCH DIAMETER EYEBOLT TO HOLD TENSION WIRE SHALL BE PLACED AT LINE POSTS.
P. STRETCHER BARS SHALL BE 3/16-INCH BY 3/4-INCH OR HAVE EQUIVALENT CROSS-SECTIONAL AREA.
Q. ALL CORNER GATE AND PANELS SHALL HAVE A 3/8-INCH TRUSS ROD WITH TURNBUCKLES.
R. ALL POSTS EXCEPT GATE POSTS SHALL HAVE A COMBINATION CAP AND BARBED WIRE SUPPORTING ARM. GATE POSTS SHALL HAVE A DOME CAP.
S. OTHER HARDWARE INCLUDES BUT MAY NOT BE LIMITED TO TIE CLIPS, BAND CLIPS AND TENSION BAND CLIPS.
T. BARBED WIRE GATE GUARDS SHALL BE FITTED WITH DOME CAPS.
U. BARBED WIRE SUPPORT ARMS SHALL BE PRESSED STEEL COMPLETE WITH SET BOLT AND LOCK WIRE IN THE ARM.
V. ALL CAPS SHALL BE MALLEABLE IRON, DOME OR ACORN SHAPED AS REQUIRED BY PIPE SIZE.
W. WHERE THE USE OF CONCERTINA HAS BEEN SPECIFIED, 24-INCH DIAMETERS COIL. BARBED TAPE, STAINLESS STEEL, CYCLONE FENCE MODEL G8P TO TYPE III SHALL BE FURNISHED. IT SHALL BE SUPPORTED ABOVE THE TOP RAIL BY USE OF SIX(6) WIRE BARBED WIRE ARMS POSITIONED ATOP EACH LINE/CORNER POST.

PART 3 - EXECUTION

1. INSPECTION

TO CONFIRM PROPER DEPTH AND DIAMETER OF POST HOLE EXCAVATIONS. ALL POST HOLES WILL BE EXCAVATED AS PER CONSTRUCTION DOCUMENTS.

2. INSTALLATION

A. FOUNDATIONS SHALL HAVE A MINIMUM SIX (6) INCH CONCRETE COVER UNDER POST.
B. ALL FENCE POSTS SHALL BE VERTICALLY PLUMB ; ONE QUARTER (1/4) INCH
C. AT CORNER POSTS, GATE POSTS, AND SIDES OF GATE FRAME, FABRIC SHALL BE ATTACHED WITH STRETCHER AND TENSION BAND-CLIPS AT FIFTEEN(15) INCH INTERVALS.
D. AT LINE POSTS, FABRIC SHALL BE ATTACHED WITH BAND-CLIPS AT FIFTEEN (15) INCH INTERVALS.
E. FABRIC SHALL BE ATTACHED TO BRACE RAILS, TENSION WIRE AND TRUSS RODS WITH TIE-CLIPS AT TWO (2) FOOT INTERVALS.
F. A MAXIMUM GAP OF ONE INCH WILL BE PERMITTED BETWEEN TIE CHAIN LINE FABRIC AND THE FINAL GRADE.
G. GATE SHALL BE INSTALLED SO LOCKS ARE ACCESSIBLE FROM BOTH SIDES.
H. GATE HINGE BOLTS SHALL HAVE THEIR THREADS PEENED OR WELDED TO PREVENT UNAUTHORIZED REMOVAL.
I. CONCRETE TO BE A MINIMUM OF 3,000 PSI.

3. PROTECTION

UPON COMPLETION OF ERECTION, INSPECT FENCE MATERIAL AND PAINT FIELD CUTS OR GALVANIZING BREAKS WITH ZINC-BASED PAINT, COLOR TO MATCH THE GALVANIZED METAL.

APPLICABLE STANDARDS

ASTM-A120	SPECIFICATION FOR PIPE, STEEL BLACK AND HOT-DIPPED ZINC COATED (GALVANIZED) WELDED AND SEAMLESS, FOR ORDINARY USES.
ASTM-A123	ZINC (HOT-DIP GALVANIZED) COATING ON IRON AND STEEL PRODUCTS.
ASTM-A153	STANDARD SPECIFICATION FOR ZINC COATING (HOT-DIP) ON IRON AND STEEL HARDWARE.
ASTM-A392	SPECIFICATION FOR ZINC-COATED STEEL CHAIN LINK FENCE
FABRIC. ASTM-A491	SPECIFICATION FOR ALUMINUM-COATED STEEL CHAIN LINK FENCE
FABRIC ASTM-A525	STANDARD SPECIFICATION FOR STEEL SHEET ZINC COATED (GALVANIZED) BY THE HOT-DIPPED PROCESS.
ASTM-A570	SPECIFICATION FOR HOT-ROLLED CARBON STEEL SHEET AND STRIP. STRUCTURAL QUALITY.
ASTM-A535	SPECIFICATION FOR ALUMINUM COATED STEEL BARBED WIRE.

FEDERAL SPECIFICATION RR-F-191- FENCING, WIRE AND POST METAL (AND GATES, CHAIN LINK FENCE FABRIC, AND ACCESSORIES)

METALS

PART 1 - GENERAL

SECTION INCLUDES:

1. STRUCTURAL STEEL FRAMING MEMBERS, BASE PLATES, PLATES, BARS, THREADED STRUCTURAL FASTENERS, ANTENNA SUPPORT ASSEMBLIES, GRATING, STEEL PLATFORMS AND PEDESTAL SUPPORTS, AND GROUTING UNDER BASE PLATES.

QUALITY ASSURANCE

1. FABRICATE STRUCTURAL STEEL MEMBERS IN ACCORDANCE WITH AISC SPECIFICATIONS FOR THE DESIGN, FABRICATION AND ERECTION OF STRUCTURAL STEEL FOR BUILDINGS.
2. PERFORM DESIGN UNDER DIRECT SUPERVISION OF A PROFESSIONAL STRUCTURAL ENGINEER LICENSED IN THE STATE.

PART 2 - PRODUCTS

1. MATERIALS:

A. STRUCTURAL STEEL MEMBERS:	ASTM A572, GRADE 50
B. STRUCTURAL TUBING:	ASTM A500, GRADE B
C. PIPE:	ASTM A53, TYPE E OR S, GRADE B
D. BOLTS, NUTS, AND WASHERS:	ASTM A325
E. ANCHOR BOLTS:	ASTM A307
F. WELDING MATERIALS:	AWS D1.1, TYPE REQUIRED FOR MATERIALS BEING WELDED

WISCONSIN NESTOR POPOWYCH A-3837 CHICAGO, IL ARCHITECT

DATE: 02/20/17

"I HEREBY CERTIFY THAT THESE PLANS WERE PREPARED BY ME OR UNDER MY DIRECT SUPERVISION AND THAT I AM A DULY REGISTERED ARCHITECT UNDER THE LAWS OF THE STATE OF WISCONSIN"

THE INFORMATION CONTAINED IN THIS SET OF CONSTRUCTION DOCUMENTS IS PROPRIETARY BY NATURE. ANY USE OR DISCLOSURE OTHER THAN THAT WHICH RELATES TO CARRIER SERVICES IS STRICTLY PROHIBITED.

at&t
930 NATIONAL PARKWAY
SCHAUMBURG, IL 60173

SAC WIRELESS
540 W. MADISON ST.
17TH FLOOR
CHICAGO, IL 60661
www.sacw.com
312.895.4977

A&E
SAC WIRELESS
540 W. MADISON ST.
17TH FLOOR
CHICAGO, IL 60661
www.sacw.com
312.895.4977

NSB- RAW LAND
12716346
MARTINSON
4614 COUNTY HWY A
OREGON, WI 53575

REVISIONS

REV.	DATE	DESCRIPTION	INITIALS
0	02/20/17	FOR CONSTRUCTION	GD
B	12/22/16	ISSUED FOR REVIEW	MI
A	12/08/16	ISSUED FOR REVIEW	MI

NOT FOR CONSTRUCTION UNLESS LABELED AS CONSTRUCTION SET

SHEET TITLE
NOTES & SPECIFICATIONS

SHEET NUMBER
SP2

THE INFORMATION CONTAINED IN THIS SET OF CONSTRUCTION DOCUMENTS IS PROPRIETARY BY NATURE. ANY USE OR DISCLOSURE OTHER THAN THAT WHICH RELATES TO CARRIER SERVICES IS STRICTLY PROHIBITED.

METALS CONTINUED

G. GROUT: NON-SHRINK TYPE, PREMIXED COMPOUND CONSISTING OF NONMETALLIC AGGREGATE, CEMENT, WATER REDUCING AND PLASTICIER ADDITIVES, CAPABLE OF DEVELOPING A MINIMUM COMPRESSIVE STRENGTH OF 7000 psi AT 28 DAYS.

H. SHOP AND TOUCH-UP PRIMER: SSPC 15, TYPE 1, RED OXIDE

I. TOUCH-UP PRIMER FOR GALV. SURFACES: ZINC RICH TYPE

2. FABRICATION: CONTINUOUSLY SEAL JOINTED MEMBERS BY CONTINUOUS WELDS. GRIND EXPOSED WELDS SMOOTH.

3. FINISH:

A. PREPARE STRUCTURAL COMPONENT SURFACES IN ACCORDANCE WITH SSPC SP-1 TO SP-10 PROCEDURES.
B. STRUCTURAL STEEL MEMBERS SHALL BE HOT DIPPED GALVANIZED.

PART 3 - EXECUTION

EXAMINATION AND PREPARATION:

1. VERIFY THAT THE FIELD CONDITIONS ARE ACCEPTABLE TO PERFORM THE WORK.

ERECTION:

1. ALLOW FOR ERECTION LOADS. PROVIDE TEMPORARY BRACING TO MAINTAIN FRAMING IN ALIGNMENT UNTIL COMPLETION OF ERECTION AND INSTALLATION OF PERMANENT BRIDGING AND BRACING.
2. NO UNAUTHORIZED WELDING SHALL BE PERFORMED ON CROWN CASTLE USA, INC TOWERS. ALL OTHER WELDING SHALL BE IN ACCORDANCE WITH AMERICAN WELDING SOCIETY AWS 01.1 STRUCTURAL STEEL WELDING CODE-STEEL WELD ELECTRODES SHALL BE E70XX.
3. DO NOT FIELD CUT OR ALTER STRUCTURAL MEMBERS WITHOUT APPROVAL OF THE ARCHITECT/ENGINEER.
4. AFTER ERECTION, TOUCH-UP WELDS, ABRASIONS, AND SURFACES NOT SHOP PRIMED OR GALVANIZED WITH ZINC RICH PAINT (ALL EXISTING AND NEW AREAS).

FIELD QUALITY CONTROL:

1. FIELD INSPECTION OF MEMBERS, CONNECTIONS, WELDS AND BOLT / NUT TORQUE .

CONCRETE:

PART 1 - GENERAL

1. WORK INCLUDES FORMWORK, REINFORCEMENT, ACCESSORIES, CAST-IN-PLACE CONCRETE, FINISHING, AND CURING.

2. INSPECTIONS

A. CONTRACTOR IS RESPONSIBLE FOR SCHEDULING BUILDING DEPARTMENT INSPECTIONS REQUIRED FOR THE SCOPE OF WORK BEING PERFORMED.

B. ALL REINFORCING STEEL SHALL BE INSPECTED AND APPROVED BY THE AT&TWIRELESS CONSTRUCTION MANAGER PRIOR TO PLACEMENT OF CONCRETE.

C. THE AT&TWIRELESS CONSTRUCTION MANAGER SHALL BE NOTIFIED NO LESS THAN 48 HOURS IN ADVANCE OF CONCRETE POURS.

3. QUALITY ASSURANCE

A. CONSTRUCT AND ERECT CONCRETE FORM WORK IN ACCORDANCE WITH ACI 301 AND ACI 318.

B. PERFORM CONCRETE REINFORCING WORK IN ACCORDANCE WITH ACI 301, ACI 318, AND ASTM A184.

C. PERFORM CAST-IN-PLACE CONCRETE WORK IN ACCORDANCE WITH ACI 301, ACI 318, AND ACI 117-90.

4. SUBMITTALS

SUBMIT CONCRETE MIX DESIGN AND REINFORCING STEEL SHOP DRAWINGS FOR APPROVAL BY AT&TWIRELESS CONSTRUCTION MANAGER/ENGINEER. THE SHOP DRAWINGS SHALL BE SUBMITTED IN EH FORM OF TWO (2) CONCRETE MIX DESIGN INFORMATION SHEETS AND TWO (2) BLUELINE DRAWINGS FOR REINFORCING STEEL.

PART 2 - PRODUCTS

1. REINFORCEMENT MATERIALS

A. REINFORCEMENT STEEL, ASTM A615, 60KSI YIELD GRADE, REINFORCING STEEL RODS, PLAIN FINISH.

B. WELDED STEEL WIRE FABRIC ASTM A185 PLAIN TYPE, IN FLAT SHEETS, PLAIN FINISH.

C. CHAIRS, BOLSTERS, BAR SUPPORTS, SPACERS, SIZED AND SHAPED FOR SUPPORTS OF REINFORCING.

D. FABRICATE CONCRETE REINFORCING IN ACCORDANCE WITH ACI 315, AND ACI 318, AND ASTM A184.

2. CONCRETE MATERIALS

A. CEMENT: ASTM C150, PORTLAND TYPE.

B. FINE AND COURSE AGGREGATES: ASTM C33 - MAXIMUM SIZE OF CONCRETE AGGREGATE SHALL NOT
EXCEED ONE (1) INCH SIZE SUTABLE FOR INSTALLATION METHOS UTILIZED FOR ONE-THIRD CLEAR DISTANCE
BEHIND OR BETWEEN REINFORCING.

C. WATER: CLEAN AND NOT DETRIMENTAL TO CONCRETE.

D. AIR ENTRAINING ADMIZTURE: ASTM C260.

E. BONDING AGENT: LATEX EMULSION FOR BONDING NEW TO OLD CONCRETE AS MANUFACTURED BY DAYTON SUPERIOR.

F. NON-SHRINK GROUT: PREMIXED COMPOUND CONSISTING OF NONMETALLIC AGGREGATE, CEMENT, WATER REDUCING AND PLASTICISING AGENTS.

3. CONCRETE MIX

A. CONCRETE MATERIALS SHALL CONFORM TO THE APPROPRIATE A.C.I. REQUIREMENTS FOR EXPOSED STRUCTURAL CONCRETE.

B. MIX AND DELIVER CONCRETE IN ACCORDANCE WITH ASTM C94, ALT, 3.

C. PROPORTIONS OF CONCRETE MATERIALS SHALL BE SUITABLE FOR THE INSTALLATION METHOD UTILIZED AND SHALL RESULT IN DURABLE CONCRETE FOR LOCAL ANTICIPATED AGGRESSIVE ACTIONS. THE DURABILITY REQUIREMENTS OF ACI 318 CHAPTER F4 SHALL BE SATASFIED BASED ON THE CONDITIONS EXPECTED AT THE SITE. PROVIDE CONCRETE AS FOLLOWS:
1. COMPRESSIVE STRENGTH 4000 PSI AT 28 DAYS.
2. SLUMP : 3 INCHES.

EXECUTION:

1. INSERTS, EMBEDDED COMPONENTS AND OPENINGS

A. THE CONTRACTOR SHALL COORDINATE AND CROSS CHECK ARCHITECTURAL, BUILDING AND ELECTRICAL DRAWINGS FOR OPENINGS, SLEEVES, ANCHORS, HANGERS, AND OTHER ITEMS RELATED TO CONCRETE WORK AND SHALL ASSUME FULL RESPONSIBILITY FOR THE PROPER LOCATION BEFORE PLACING CONCRETE.

B. PROVIDE FORMED OPENINGS WHERE REQUIRED FOR WORK TO BE EMBEDED IN AND PASSING THROUGH CONCRETE MEMBERS.

C. COORDINATE WORK OF OTHER SECTIONS IN FORMING AND SETTING OPENINGS, SLOTS, RECESSES, CHASES, SLEEVES, BOLTS, ANCHORS, AND OTHER INSERTS.

D. INSTALL CONCRETE ACCESSORIES STRAIGHT, LEVEL ND PLUMB.

2. REINFORCEMENT PLACEMENT

A. PLACE REINFORCEMENT, SUPPORTED AND SECURED AGAINST DISPLACEMENT.

B. ENSURE REINFORCING IS CLEAN, FREE OF LOOSE SCALE, DIRT, OR OTHER FOREIGN COATINGS.

C. WELDING IS PROHIBITED ON REINFORCING STEEL AND EMBEDMENTS.

D. MINIMUM CONCRETE COVER FOR REINFORCING SHALL BE 3 INCHES UNLESS NOTED OTHERWISE.

E. CONCRETE COVER FROM TOP OF FOUNDATION TO ENDS OF VERTICAL REINFORCEMENT SHALL NOT EXCEED 3 INCHES OR BE LESS THAN 2 INCHES.

3. PLACING CONCRETE

A. VIBRATE ALL CONCRETE.

B. ALL CONCRETE WORK SHALL ADHERE TO THE LATEST A.C.I. STANDARDS FOR WINTER POURING AND CURING PROCEDURES IF SEASONAL CONDITIONS APPLY.

4. CURING

A. AFTER PLACEMENT, PROTECT CONCRETE FROM PREMATURE DRYING.

B. MAINTAIN CONCRETE WITH MINIMAL MOISTURE LOSS AT RELATIVELY CONSISTENT TEMPERATURE FOR A PERIOD NECESSARY FOR HYDRATION OF CEMENT AND HARDENING OF CONCRETE.

5. PROVIDE HAND RUBBED SMOOTH FINISH TO ALL EXPOSED VERTIACAL FORMED CONCRETE SURFACES.

6. FIELD QUALITY CONTROL

A. SUBMIT THREE (3) CONCRETE TEST CYLINDERS - TAKEN EVERY 15 CUBIC YARDS OR LESS. SUBMIT CONCRETE TESTS TO THE PROJECT MANAGER IN ACCORDANCE TO ASTM C-31 AND C-39.

B. SUBMIT ONE (1) ADDITIONAL TEST CYLINDER - TAKEN DURING COLD WEATHER POURS, AND CURED ON JOB SITE UNDER THE SAME CONDITIONS AS THE CONCRETE IT REPRESENTS.

C. SUBMIT ONE (1) SLUMP TEST - TAKEN FOR EACH SET OF TEST CYLINDERS TAKEN.

7. DEFECTIVE CONCRETE

MODIFY OR REPLACE CONCRETE NOT CONFORMING TO REQUIRED SPECIFICATIONS, DETAILS OR ELEVATIONS AS DIRECTED BY THE AT&TWIRELESS CONSTRUCTION MANAGER.

GENERAL ELECTRICAL NOTES:

1. ALL ELECTRICAL MATERIALS, EQUIPMENT AND INSTALLATION PROCEDURES TO CONFORM WITH AT&TWIRELESS SPECIFICATIONS.

2. CONTRACTOR SHALL PERFORM ALL VERIFICATION TESTS AND EXAMINATION WORK PRIOR TO THE ORDERING OF THE ELECTRICAL EQUIPMENT AND THE ACTUAL CONSTRUCTION. CONTRACTOR SHALL ISSUE A WRITTEN NOTICE OF ALL FINDINGS TO THE ENGINEER LISTING ALL MALFUNCTIONS, FAULTY EQUIPMENT AND DISCREPANCIES.

3. ALL MATERIALS SHALL BE MANUFACTURED IN ACCORDANCE WITH APPLICABLE STANDARDS ESTABLISHED BY ANSI, NEMA, NFPA, AND 'UL' LISTED.

4. THE ENTIRE ELECTRICAL INSTALLATION SHALL BE GROUNDED AS REQUIRED PER THE NEC, AND ALL APPLICABLE LOCAL CODES.

5. ALL CIRCUIT BREAKERS, FUSES AND ELECTRICAL EQUIPMENT SHALL HAVE A MINIMUM INTERRUPTING RATING OF 42,000 AIC.

6. FOR COMPLETE INTERNAL WIRING AND ARRANGEMENT REFER TO VENDOR PRINTS PROVIDED BY AT&TWIRELESS FOR BTS CABINET.

7. PATCH, REPAIR, AND PAINT ANY AREA THAT HAS BEEN DAMAGED IN THE COURSE OF THE ELECTRICAL WORK.

8. PROVIDE AT&TWIRELESS WITH ONE SET OF COMPLETE ELECTRICAL 'AS-BUILT' DRAWINGS AT THE COMPLETION OF THE JOB SHOWING ACTUAL ROUTINGS AND WIRING CONNECTIONS.

9. ALL SINGLE-PHASE SELF CONTAINED METER CONNECTION DEVICES MUST INCLUDE HORN TYPE BY-PASS PROVISION SO THAT SERVICES WILL NOT BE INTERRUPTED WHEN A METER IS REMOVED FROM THE SOCKET.

10. ALL EQUIPMENT PUNCH OUTS AND CONDUITS (USED AND SPARE) TO BE RODENT PROOFED WITH CAPS, STEEL MESH, AND/OR FOAM FILL BY CONTRACTOR AS NEEDED.

11. NO SPOILS TO BE LEFT ON SITE WITHOUT THE WRITTEN CONSENT OF THE LANDOWNER.

12. CONTRACTOR TO PROVIDE 2 PHENOLIC LABELS AT METER ONE TO IDENTIFY 'AT&TWIRELESS DISCONNECT' AND THE OTHER TO GIVE THE SITE ADDRESS.

13. ALL CONTRACTOR FURNISHED MATERIALS AND EQUIPMENT SPECIFIED ON THE PROJECT SHALL BE NEW AND OF CURRENT MANUFACTURE AND OF THE HIGHEST GRADE.

WISCONSIN NESTOR POPOWYCH A-3837 CHICAGO, IL ARCHITECT

"I HEREBY CERTIFY THAT THESE PLANS WERE PREPARED BY ME OR UNDER MY DIRECT SUPERVISION AND THAT I AM A DULY REGISTERED ARCHITECT UNDER THE LAWS OF THE STATE OF WISCONSIN"

DATE: 02/20/17

at&t
930 NATIONAL PARKWAY
SCHAUMBURG, IL 60173

SAC WIRELESS
540 W. MADISON ST.
17TH FLOOR
CHICAGO, IL 60661
www.sacw.com
312.895.4977

A&E
SAC WIRELESS
540 W. MADISON ST.
17TH FLOOR
CHICAGO, IL 60661
www.sacw.com
312.895.4977

NSB- RAW LAND
12716346
MARTINSON
4614 COUNTY HWY A
OREGON, WI 53575

REVISIONS

REV.	DATE	DESCRIPTION	INITIALS
0	02/20/17	FOR CONSTRUCTION	GD
B	12/22/16	ISSUED FOR REVIEW	MI
A	12/08/16	ISSUED FOR REVIEW	MI

NOT FOR CONSTRUCTION UNLESS LABELED AS CONSTRUCTION SET

SHEET TITLE
NOTES & SPECIFICATIONS

SHEET NUMBER
SP3

GENERAL ELECTRICAL NOTES (CONTINUED):

14. ALL EQUIPMENT, MATERIAL AND THE INSTALLATION METHODS SPECIFIED ON THE PROJECT DRAWINGS SHALL BE DESIGNED AND FABRICATED IN COMPLIANCE WITH APPLICABLE FEDERAL, STATE, AND LOCAL CODES AND REGULATIONS, AND APPROPRIATE INDUSTRIAL CONSENSUS STANDARDS AND CODES INCLUDING ANSI, IEEE, NEMA, NFPA AND UL, ALL AS REVISED AS OF THE DATE OF THIS WORK PACKAGE.

15. ALL ELECTRICAL ITEMS BOTH CONTRACTOR AND OWNER FURNISHED SHALL BE CHECKED FOR AGREEMENT WITH THE PROJECT DRAWINGS AND SPECIFICATIONS AND SHALL BE VISUALLY INSPECTED TO ENSURE THAT EQUIPMENT IS UNDAMAGED AND IS IN PROPER ALIGNMENT, INSTALLED PER MANUFACTURER'S INSTRUCTIONS, ELECTRICAL CONNECTIONS ARE TIGHT AND PROPERLY INSULATED WHERE REQUIRED, FUSES ARE OF THE PROPER TYPE AND SIZE, AND ELECTRICAL ENCLOSURES ARE OF THE PROPER NEMA TYPE.

16. NOTIFY OWNER IN WRITING OF ALL DISCREPANCIES BETWEEN DRAWINGS / SPECIFICATIONS AND FIELD INSTALLATIONS, OR IF THE VISUAL INSPECTIONS SHOW DAMAGE OR IMPROPER INSTALLATION.

17. THE EQUIPMENT AND MATERIALS SHALL BE FURNISHED AND INSTALLED TO OPERATE SAFELY AND CONTINUOUSLY WITH NO PROTECTION FROM THE WEATHER.

18. ELECTRICAL WORK REPRESENTED ON THE PROJECT DRAWINGS IS SHOWN DIAGRAMMATICALLY. EXACT LOCATIONS AND ELEVATIONS OF ELECTRICAL EQUIPMENT SHALL BE DETERMINED IN THE FIELD AND VERIFIED WITH THE OWNER'S REPRESENTATIVE.

19. CONTRACTOR SHALL COORDINATE THE INSTALLATION OF TEMPORARY, IF REQUIRED, AND PERMANENT POWER WITH THE LOCAL UTILITY COMPANY. THE TEMPORARY POWER AND ALL HOOKUP COSTS ARE TO BE PAID BY THE CONTRACTOR.

20. PROVIDE MOLDED CASE, BOLT ON, THERMAL MAGNETIC TRIP, SINGLE TWO OR THREE POLE CIRCUIT BREAKERS. MULTIPLE POLE CIRCUIT BREAKERS SHALL BE SINGLE HANDLE COMMON TRIP. SHORT CIRCUIT INTERRUPTING RATING SHALL BE AS REQUIRED FOR AVAILABLE FAULT CURRENTS. ALL CIRCUIT BREAKERS, FUSES AND ELECTRICAL EQUIPMENT SHALL HAVE A SHORT CIRCUIT INTERRUPTING RATING EQUAL TO OR GREATER THAN THAT SHOWN ON THE PROJECT DRAWINGS.

21. CONTRACTOR SHALL PERFORM ALL EXCAVATION, TRENCHING, BACKFILLING, AND REMOVAL OF DEBRIS IN CONNECTION WITH THE ELECTRICAL WORK IN ACCORDANCE WITH THE PROJECT DRAWINGS. CONTRACTOR SHALL COORDINATE THE INSTALLATION OF UNDERGROUND UTILITIES AND GROUND WITH THE FOUNDATION INSTALLATION. HAND DIGGING WILL BE REQUIRED IN THE COMPOUND ONLY.

22. CONTRACTOR SHALL PROVIDE ALL NECESSARY SUPPORTS FOR EQUIPMENT INSTALLED AS PART OF THIS PROJECT. SUPPORTS SHALL CONSIST OF GALVANIZED STEEL FRAMES, PLATES, BRACKETS, RACKS AND OTHER SHAPES OF ADEQUATE SIZE AND FASTENED WITH BOLTS, SCREWS OR BY WELDING TO PROVIDE RIGID SUPPORT.

23. CONTRACTOR SHALL CALL THE APPROPRIATE UTILITIES PROTECTION SERVICE BEFORE ANY UNDERGROUND WORK IS PERFORMED, SUCH AS TRENCHING, EXCAVATING, AND DRIVING GROUNDING RODS.

24. ALL ELECTRICAL EQUIPMENT SHALL BE LABELED WITH PERMANENTLY ENGRAVED LAMINATED PHENOLIC NAMEPLATES. (MINIMUM LETTER HEIGHT SHALL BE 1/2") NAMEPLATES SHALL BE FASTENED WITH STAINLESS STEEL SCREWS AND AS PER AT&TWIRELESS SPECIFICATIONS.

GENERAL RACEWAY NOTES:

1. CONDUIT AND CONDUIT FITTINGS SHALL MEET ANSI AND NEC STANDARDS FOR MATERIAL AND WORKMANSHIP AND SHALL BE UL LISTED.

   A. RIGID STEEL CONDUIT SHALL CONFORM TO ANSI C801 AND REQUIREMENTS OF NEC, PARAGRAPH 346 AND BE STANDARD WEIGHT, MILD RIGID STEEL, HOT DIP GALVANIZED WITH INSIDE AND OUTSIDE FINISHED WITH A PROTECTIVE ZINC COATING. COUPLING ELBOWS AND BENDS SHALL MEET THESE SAME REQUIREMENTS. FITTINGS SHALL BE OF THE GALVANIZED IRON OR STEEL THREADED TYPE.

   B. PVC CONDUIT SHALL CONFORM TO UL STANDARD 651-89 AND THE REQUIREMENTS OF NEC, PARAGRAPH 347. CONDUIT SHALL BE HEAVY WALL TYPE, SCHEDULE 40 OR 80, AND SUNLIGHT RESISTANT. FITTINGS SHALL BE OF THE UNTHREADED SOLVENT CEMENT TYPE.

   C. EMT CONDUIT (FOR USE BEHIND WALLS OR ABOVE SUSPENDED CEILINGS ONLY). ELECTRIC METALLIC TUBING SHALL CONFORM TO ANSI C803 AND THE REQUIREMENTS OF NEC, PARAGRAPH 348 AND BE PROTECTED ON EXTERIOR WITH A ZINC COATING AND ON INTERIOR SURFACES WITH EITHER A ZINC COATING OR LACQUER ENAMEL. FITTINGS SHALL BE ZINC COATED STEEL.

2. MINIMUM CONDUIT SIZE SHALL BE 3/4", SIZES NOT SHOWN ON DRAWINGS SHALL BE PER NEC.

3. ALL SPARE CONDUITS SHALL HAVE A METALLIC PULL WIRE.

4. CONDUIT SUPPORTS SHALL BE FURNISHED AND INSTALLED BY THE ELECTRICAL CONTRACTOR AND IN ACCORDANCE WITH THE NEC.

5. UNDERGROUND CONDUITS.

   A. INSTALL A WARNING TAPE TWELVE INCHES ABOVE EACH CONDUIT OR SET OF CONDUITS.

   B. IDENTIFY EACH CONDUIT AT BOTH ENDS. INSTALL MINIMUM OF 3'-0" BELOW THE FINISHED GRADE, OR DEEPER IF NOTED ON PLAN DRAWINGS.

   C. SLOPE A MINIMUM OF 4" PER 100'-0" TO DRAIN AWAY FROM BUILDINGS AND EQUIPMENT.

   D. USE MANUFACTURED ELECTRICAL ELBOWS AND FITTINGS FOR BELOW GRADE BENDS.

   E. MAKE JOINTS AND FITTINGS WATERTIGHT ACCORDING TO MANUFACTURER'S INSTRUCTIONS.

   F. INSTALL A COUPLING BEFORE EACH WALL PENETRATION.

   G. RESTORE SURFACE FEATURES DISTURBED BY EXCAVATION (AND TRENCHING) IN ALL AREAS.

GENERAL CONDUCTOR NOTES:

1. ALL POWER, CONTROL AND COMMUNICATION WIRING SHALL MEET NEMA-WC, ASTM, UL, AND NEC STANDARDS FOR MATERIAL AND WORKMANSHIP UNLESS OTHERWISE SPECIFIED.

   A. SERVICE ENTRANCE CONDUCTORS SHALL BE COPPER, 600 VOLT, SUNLIGHT RESISTANT, SUITABLE FOR WET LOCATIONS, TYPE USE-2. THE GROUNDED NEUTRAL CONDUCTOR SHALL BE IDENTIFIED WITH A WHITE MARKING AT EACH TERMINATION.

   B. CONDUCTORS FOR FEEDER AND BRANCH CIRCUITS SHALL BE COPPER 600 VOLT, TYPE THHN / THWN WITH A MINIMUM SIZE OF #12 AWG.

2. ALL CONDUCTOR ACCESSORIES INCLUDING CONNECTORS, TERMINATIONS, INSULATING MATERIALS, SUPPORT GRIPS, MARKER AND CABLE TIES SHALL BE FURNISHED AND INSTALLED SUPPLIER'S INSTALLATION INSTRUCTIONS SHALL BE OBTAINED FOR CABLE ACCESSORIES. THESE INSTRUCTIONS SHALL BE IN THE POSSESSION OF THE CRAFTSMAN WHILE INSTALLING THE ACCESSORIES AND SHALL BE AVAILABLE TO THE COMPANY FOR REFERENCE.

3. WHERE POSSIBLE, NO. 6 AWG AND SMALLER WIRE SHALL BE COLORED CODED BY THE COLOR OF THE INSULATION COVERING. COLOR CODING OF WIRE LARGER THAN NO. 6 AWG MAY BE BY MEANS OF SELF-ADHESIVE WRAP AROUND TYPE MARKERS, PER NEC.

4. TERMINAL CONNECTOR FOR CONDUCTORS 8 AWG AND LARGER SHALL BE PRESSURE OR BOLTED CLAMP TYPE BURNDY QUIKLUG, VARILUG OR ACCEPTABLE EQUAL: OR COMPRESSION TYPE, BURNDY TYPE YAV OR YA (LONG BARREL), PANDUIT TYPE LCA OR LCC, OR ACCEPTABLE EQUAL. ACCEPTABLE CONNECTORS INCLUDED WITH COMPANY-FURNISHED EQUIPMENT MAY BE USED.

5. TERMINATION PROVISIONS OF EQUIPMENT FOR CIRCUITS RATED 100 AMPERES OR LESS OR MARKED FOR NOS. 14 THROUGH 1 CONDUCTORS, SHALL BE USED ONLY FOR CONDUCTORS RATED 66°C (140°F). CONDUCTORS WITH HIGHER TEMPERATURE RATINGS SHALL BE PERMITTED, PROVIDED THE AMPACITY OR THE CONDUCTOR SIZE USED.

6. TERMINATION PROVISIONS OF EQUIPMENT FOR CIRCUITS RATED OVER 100 AMPERES, OR MARKED FOR CONDUCTORS LARGER THAN NO.1 SHALL BE USED ONLY FOR CONDUCTORS RATED 75°C (167°F) CONDUCTORS WITH HIGHER TEMPERATURE RATINGS SHALL BE PERMITTED, PROVIDED THE AMPACITY OF EACH CONDUCTOR IS DETERMINED BASED UPON THE 75°C (167°F) AMPACITY OF THE CONDUCTOR SIZE USED.

7. ALL 600 VOLT OR LESS WIRING, WHERE COMPRESSION TYPE CONNECTORS ARE USED, SHALL BE INSULATED WITH AT LEAST ONE TURN OF 'SCOTCHFILL' ELECTRICAL INSULATING PUTTY AND THEN COVERED WITH TWO HALF TURNS OF TAPE SIMILAR TO 3M COMPANY'S '33 PLUS (33+) PLASTIC TAPE OR 88 OUTDOOR TAPE.

8. TERMINAL CONNECTORS FOR CONDUCTORS SMALLER THAN 8 AWG SHALL BE COMPRESSION TYPE CONNECTORS SIZED FOR THE CONDUCTOR AND THE TERMINAL. THE CONNECTORS SHALL BE CONSTRUCTED OF FINE GRADE HIGH CONDUCTIVITY COPPER IN ACCORDANCE WITH QQ-C-516 AND SHALL BE TIN-PLATED IN ACCORDANCE WITH MIL-T-10727. THE INTERIOR SURFACE OF THE CONNECTOR WIRE BARREL SHALL BE SERRATED AND THE EXTERIOR SURFACE OF THE CONNECTOR WIRE BARREL SHALE BE PROVIDED WITH CRIMP GUIDES.

GENERAL GROUNDING NOTES:

1. ALL WORK SHALL COMPLY WITH THE LATEST AT&TWIRELESS GROUNDING SPECIFICATIONS AND REQUIREMENTS.

2. ALL METALLIC COMPONENTS ON THE SITE MUST BE GROUNDED TO THE GROUND RING. THIS INCLUDES STEEL CONDUITS USED TO DELIVER THE TELCO AND POWER UTILITY LINES TO THE SITE OR USED TO PROVIDE ACCESS BY UTILITIES OR CONTRACTORS TO THE VARIOUS CABINETS.

3. ALL GROUND LEADS ABOVE GRADE SHALL BE INSTALLED IN 3/4" SCHEDULE 40 PVC.

4. WHEN EARTH RESISTANCE TEST INDICATES THAT THE SOIL IS ABOVE MINIMUM ALLOWABLE RESISTANCE, THAN THE CONTRACTOR SHALL ESTIMATE THE TYPE, NUMBER AND ARRANGEMENT OF EARTH ELECTRODES. CONTRACTOR SHALL ALSO CONSIDER COMPANY'S SITE SPECIFIC APPROACHES FOR IMPROVING EARTH RESISTANCE AT THE SITE BY METHODS INDICATED BELOW:

   RAW LAND
   A. USE MULTIPLE RODS
   B. LENGTHEN THE EARTH ELECTRODE
   C. TREAT THE SOIL
   D. USE CHEMICAL RODS

5. THE CONTRACTOR MUST VERIFY THAT NEW GROUNDING SYSTEM RESISTANCE IS EQUAL TO OR LESS THAN FIVE (5) OHMS PER AT&TWIRELESS SPECIFICATIONS.

6. RUN ALL GROUND WIRES IN AN ORGANIZED MANNER, AVOID CROSSING OF WIRES WHEREVER POSSIBLE. DO NOT RUN WIRES OVER CONCRETE SLAB.

7. INSTALL ALL GROUND WIRES IN A DOWNWARD SLOPE FOR MAXIMUM LIGHTNING PROTECTION.

8. MAINTAIN ALL MINIMUM BENDING RADII OF THE GROUNDING WIRES.

9. DO NOT REMOVE MORE INSULATION FROM THE GROUND WIRES THAN NECESSARY WHEN CADWELDING OR CRIMPING IF EXCESS INSULATION IS REMOVED, THE CONNECTION WILL BE CONSIDERED UNACCEPTABLE AND WILL BE CORRECTED PER THE AT&TWIRELESS REPRESENTATIVES'S DIRECTION.

10. DOWN LEAD FOR ANTENNA SECTORS MUST BE CONNECTED DIRECTLY TO THE GROUND RING.

11. ALL BASE TRANSCEIVER SITE EQUIPMENT SHALL BE GROUNDED IN ACCORDANCE WITH THE INTERNATIONAL ELECTRICAL CODE (NEC), AND THE LATEST EDITION OF LIGHTNING PROTECTION CODE NFPA 780 AND AT&TWIRELESS STANDARDS.

12. THE ELECTRICAL SERVICE TO THE SITE SHALL BE GROUNDED AT THE SERVICE DISCONNECTING MEANS REQUIRED IN ARTICLE 250 OF THE NATIONAL ELECTRIC CODE, IN ACCORDANCE WITH ANY LOCAL CODE.

13. ALL UNDERGROUND (BELOW GRADE) GROUNDING CONNECTIONS SHALL BE MADE BY THE CADWELD PROCESS (MECHANICAL LUG ATTACHMENTS BELOW GRADE ARE NOT ACCEPTABLE). CONNECTIONS SHALL INCLUDE ALL CABLE SPLICES (TEES, X'S, ETC.) ALL CABLE CONNECTIONS TO GROUND RODS, GROUND ROD SPLICES, AND LIGHTING PROTECTION SYSTEM AS INDICATED. ALL MATERIALS USED (MOLDS, WELDING METALS, TOOLS, ETC.) SHALL BE BY CADWELD AND INSTALLED PER MANUFACTURERS RECOMMENDATION AND PROCEDURES.

14. ALL GROUNDING AND BONDING CONDUCTORS THAT ARE CONNECTED ABOVE GRADE INTERIOR TO A BUILDING SHALL BE CONNECTED USING TWO HOLE CRIMP TYPE (COMPRESSION) CONNECTORS FOR #2 AND #6 AWG INSULATED COPPER CONDUCTOR.

15. ALL GROUNDING CONNECTIONS, INTERIOR AND EXTERIOR, MADE THROUGHOUT THIS DOCUMENT SHALL BE MADE USING AN ANTI-OXIDATION COMPOUND, THE ANTI-OXIDATION COMPOUND SHALL BE 'THOMAS AND BETTS' KOPR-SHIELD (TIM OF JET LUBE, INC.) THERE IS NO EQUIVALENT FOR THIS PRODUCT: NO OTHER COMPOUND WILL BE ACCEPTED. COAT ALL WIRES BEFORE LUGGING. COAT ALL SURFACES BEFORE CONNECTING.

16. ALL CONNECTIONS SHALL BE MADE TO BARE METAL. ALL PAINTED SURFACES SHALL BE FIELD INSPECTED AND MODIFIED TO ENSURE PROPER CONTACT PRIOR TO CADWELD, GALVANIZING SHALL BE REMOVED BY GRINDING SURFACE TO BARE METAL 'SLAG' FROM CADWELD MUST BE REMOVED AND WELD SHALL BE SPRAYED WITH COLD GALVANIZE AFTER COMPLETION.

GENERAL GROUNDING NOTES CONTINUED:

17. FERROUS METAL CLIPS WHICH COMPLETELY SURROUND THE GROUNDING CONDUCTOR SHALL NOT BE USED. CLIPS OF THE FOLLOWING MATERIALS AND TYPES MAY BE USED TO SUPPORT GROUNDING CONDUCTORS.

   - PLASTIC CLIPS
   - STAINLESS STEEL CLIPS WHICH DO NOT COMPLETELY SURROUND THE GROUNDING CONDUCTOR.
   - FERROUS METAL CLIPS WHICH DO NOT COMPLETELY SURROUND THE GROUNDING CONDUCTOR.

18. ALL BELOW GRADE GROUNDING CONDUCTORS SHALL BE BARE SOLID COPPER WIRE. ABOVE-GRADE GROUNDING CONDUCTORS MAY BE EITHER OR AS INDICATED ON THE DRAWINGS:

   - BARE TINNED SOLID COPPER WIRE
   - THWN-INSULATED, CONTINUOUS GREEN COLOR, SOLID COPPER WIRE
   - THWN-INSULATED, CONTINUOUS GREEN COLOR STRANDED COPPER WIRE

   A. THE UNDERGROUND GROUND RING SHALL HAVE A #2 AWG BARE TINNED SOLID COPPER WIRE.

   B. #2 THWN SHALL BE STRANDED COPPER WITH GREEN THWN INSULATION SUITABLE FOR WET INSTALLATION (OR SOME ABOVE GROUND APPLICATIONS, I.E. INDOOR GROUNDING RING)

   C. #2 BARE TINNED COPPER SHALL BE SOLID. ALL BURIED WIRE SHALL MEET THIS CRITERIA INCLUDING CABLE TRAY GROUNDING WIRES AND WIRES INDICATED ON THE DRAWINGS.

   (THE MINIMUM BEND RADIUS IS 8" FOR #6 AWG AND SMALLER, AND 12 INCHES FOR WIRE LARGER THAN #6 AWG)

19. ALL HARDWARE, BOLTS, NUTS, WASHERS, AND LOCK WASHERS SHALL BE 18-8 STAINLESS STEEL. EVERY CONNECTION SHALL BE (BOLT-FLATWASHER-BUSS-LUG-FLATWASHER-LOCKWASHER-NUT), IN THAT EXACT ORDER WITH NUT FACING OUTWARD, BACK TO BACK LUGGING SHALL BE (BOLT-FLATWASHER-LUG-FLATWASHER-LUG -BUSS-LUG-FLATWASHER-LOCK WASHER-NUT), IN THAT EXACT ORDER IS ACCEPTED WHERE NECESSARY TO CONNECT MANY LUGS TO A BUSS BAR. STACKING OF LUGS, BUS-LUG-LUG, IS NOT ACCEPTABLE.

20. THE COMPRESSION GROUND LUG FOR #2 AWG BARE SOLID GROUNDING CONDUCTORS SHALL BE BURNDY TYPE YA3C-2TC.

21. THE ANTENNA CABLES SHALL BE GROUNDED AT THE TOP AND BOTTOM OF THE VERTICAL RUN. THE ANTENNA CABLE SHIELD SHALL BE BONDED TO A COPPER GROUND BUS AT THE LOWEST POINT OF THE VERTICAL RUN. THE ANTENNA CABLE SHELD SHALL BE GROUNDED JUST BEFORE ENTERING THE BTS. GROUNDING KITS ON COAX CABLE SHALL HAVE A MINIMUM BEND OF 6" AND SHALL BE KEPT AS CLOSE TO VERTICAL AS POSSIBLE. FLAT WASHER SUPPLIED WITH GROUND KITS MUST BE REPLACED WITH SMALLER STAINLESS STEEL FLAT WASHERS, WASHERS MUST REMAIN FLAT AGAINST GROUND BAR, ALL FASTENERS MUST BE STAINLESS STEEL AND KOPR-SHIELD MUST BE USED ON BOTH SIDES OF THE GROUND BAR.

THE INFORMATION CONTAINED IN THIS SET OF CONSTRUCTION DOCUMENTS IS PROPRIETARY BY NATURE. ANY USE OR DISCLOSURE OTHER THAN THAT WHICH RELATES TO CARRIER SERVICES IS STRICTLY PROHIBITED.

at&t
930 NATIONAL PARKWAY
SCHAUMBURG, IL 60173

SAC WIRELESS
540 W. MADISON ST.
17TH FLOOR
CHICAGO, IL 60661
www.sacw.com
312.895.4977

A&E
SAC WIRELESS
540 W. MADISON ST.
17TH FLOOR
CHICAGO, IL 60661
www.sacw.com
312.895.4977

NSB- RAW LAND
12716346
MARTINSON
4614 COUNTY HWY A
OREGON, WI 53575

REVISIONS

REV.	DATE	DESCRIPTION	INITIALS
0	02/20/17	FOR CONSTRUCTION	GD
B	12/22/16	ISSUED FOR REVIEW	MI
A	12/08/16	ISSUED FOR REVIEW	MI

NOT FOR CONSTRUCTION UNLESS LABELED AS CONSTRUCTION SET

WISCONSIN
NESTOR POPOWYCH
A-3837
CHICAGO, IL
ARCHITECT

"I HEREBY CERTIFY THAT THESE PLANS WERE PREPARED BY ME OR UNDER MY DIRECT SUPERVISION AND THAT I AM A DULY REGISTERED ARCHITECT UNDER THE LAWS OF THE STATE OF WISCONSIN"

DATE: 02/20/17

SHEET TITLE
NOTES & SPECIFICATIONS

SHEET NUMBER
SP4

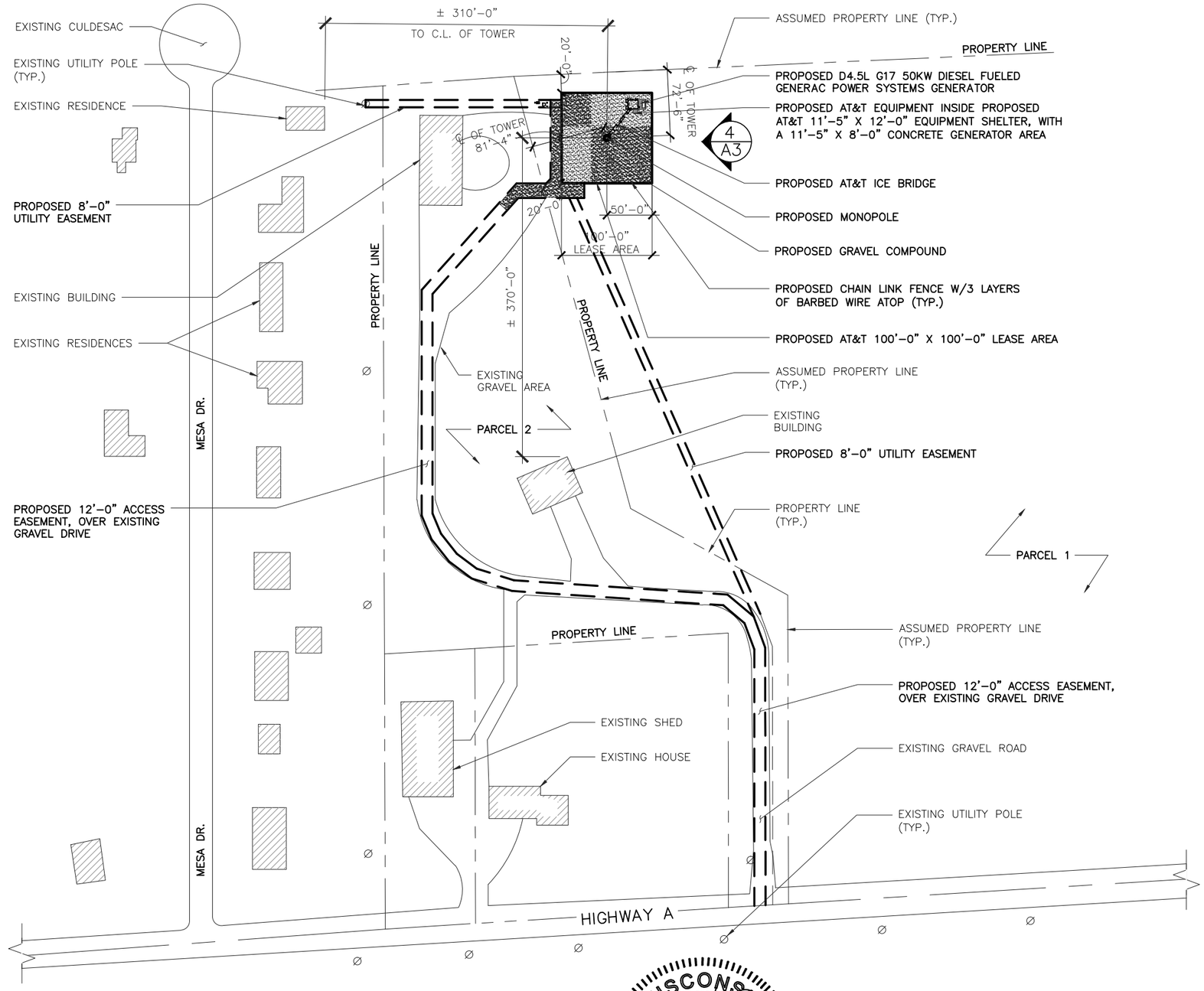

SITE PLAN

60' 0 30' 60'

SCALE: 1/64" = 1'-0" (24x36)
(OR) 1/128" = 1'-0" (11x17)

1

at&t
930 NATIONAL PARKWAY
SCHAUMBURG, IL 60173

SAC WIRELESS
540 W. MADISON ST.
17TH FLOOR
CHICAGO, IL 60661
www.sacw.com
312.895.4977

A&E
SAC WIRELESS
540 W. MADISON ST.
17TH FLOOR
CHICAGO, IL 60661
www.sacw.com
312.895.4977

NSB– RAW LAND
12716346
MARTINSON
4614 COUNTY HWY A
OREGON, WI 53575

REVISIONS

REV.	DATE	DESCRIPTION	INITIALS
0	02/20/17	FOR CONSTRUCTION	GD
B	12/22/16	ISSUED FOR REVIEW	MI
A	12/08/16	ISSUED FOR REVIEW	MI

NOT FOR CONSTRUCTION UNLESS LABELED AS CONSTRUCTION SET

WISCONSIN
NESTOR POPOWYCH
A-3837
CHICAGO, IL
ARCHITECT

DATE: 02/20/17

"I HEREBY CERTIFY THAT THESE PLANS WERE PREPARED BY ME OR UNDER MY DIRECT SUPERVISION AND THAT I AM A DULY REGISTERED ARCHITECT UNDER THE LAWS OF THE STATE OF WISCONSIN"

SHEET TITLE
SITE PLAN

SHEET NUMBER
A1

THE INFORMATION CONTAINED IN THIS SET OF CONSTRUCTION DOCUMENTS IS PROPRIETARY BY NATURE. ANY USE OR DISCLOSURE OTHER THAN THAT WHICH RELATES TO CARRIER SERVICES IS STRICTLY PROHIBITED.

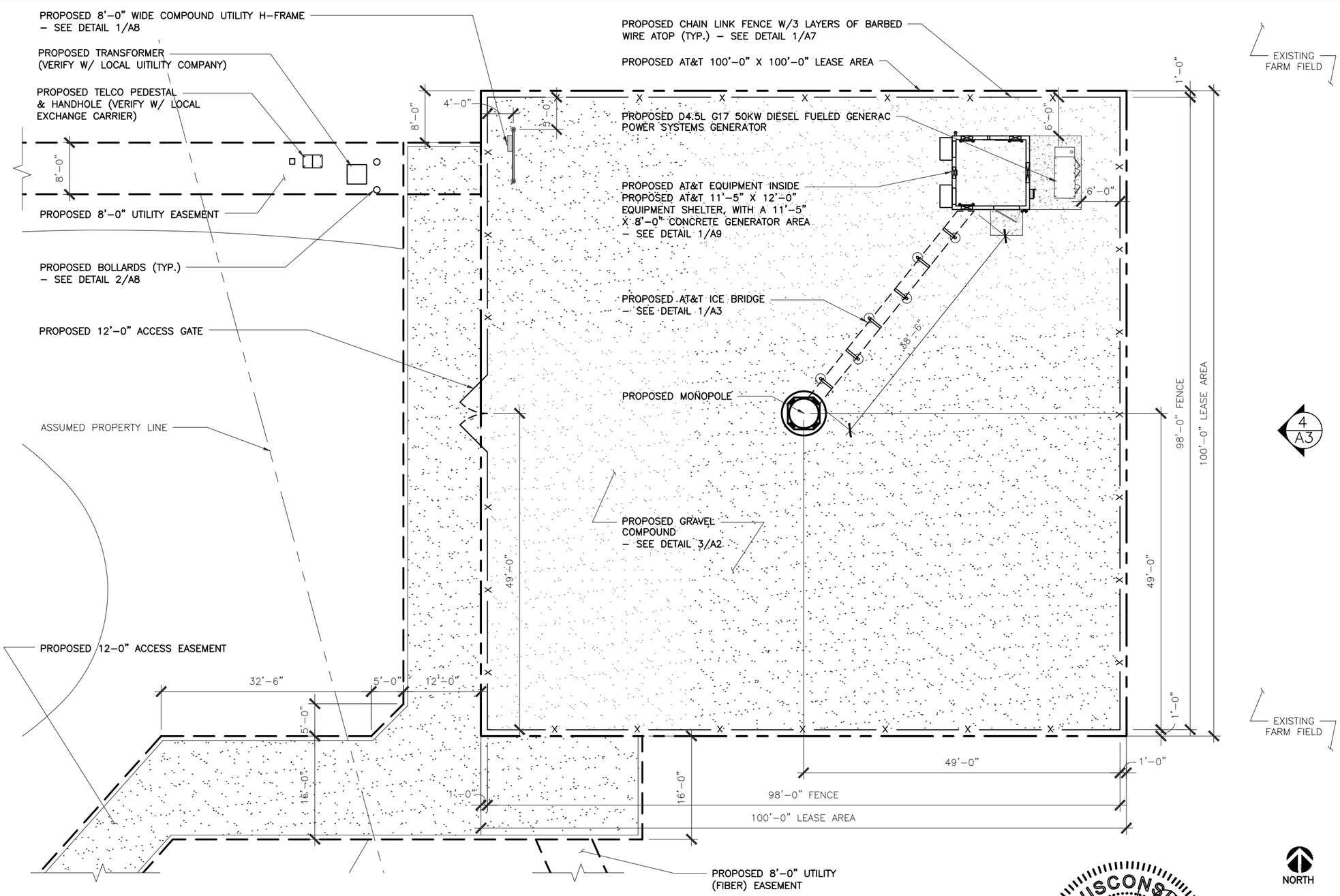

SITE AREA	ACCESS DRIVE
BASE COURSE: 4" MIN. OF COMPACTED CA-6 COARSE AGGREGATE.	BASE COURSE: 6" MIN. OF COMPACTED CA-3 COARSE AGGREGATE.
TOP COURSE: 4" MIN. OF COMPACTED CA-7 COARSE AGGREGATE.	TOP COURSE: 3" MIN. OF COMPACTED CA-6 COARSE AGGREGATE.

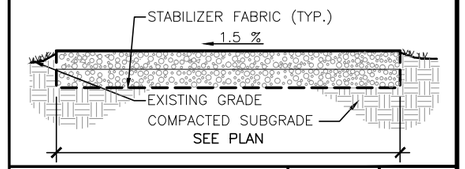

GRAVEL PAVING DETAIL | 3

1. ELEVATIONS ARE ABOVE MEAN SEA LEVEL.
2. DO NOT SCALE DIMENSIONS FROM THIS DRAWING.
3. ALL EXISTING RECORDED EASEMENTS ARE INDICATED ON THIS DRAWING TO THE BEST OF THE ARCHITECT'S KNOWLEDGE PER VISUAL INSPECTION, SURVEY DRAWINGS, AND INFORMATION RECEIVED FROM AT&T WIRELESS.
4. REFER TO SP1 AND SP2 FOR EROSION CONTROL AND SOIL STABILIZATION METHODS

GENERAL NOTES | 2

LOCATION: BASE OF TOWER
ELEVATION: 1007.50' A.M.S.L. (@ BASE GUY TOWER)
LATITUDE: 42° 53' 54.83" N
LONGITUDE: -89° 21' 30.08" W

HORIZONTAL DATUM: NAD83
VERTICAL DATUM: NAVD88

SURVEY BENCHMARK/PROJECT DATUM

EXISTING		NEW
—SAS—	SANITARY SEWER	—SAS—
—STS—	STORM SEWER	—STS—
—W—	WATER MAIN	—W—
RIM INV	SANITARY MANHOLE ELEVATIONS	RIM INV
RIM INV	STORM STRUCTURE ELEVATIONS	RIM INV
	PROPERTY LINE & R.O.W.	
	SURFACE DRAINAGE	
	LIGHT STANDARD	
	STREET LIGHT	
672.75	SPOT ELEVATION	672.75
672	CONTOUR	672
672	CONTOUR TO BE REGRADED	
—G—G—	GAS MAIN	—G—G—
	MANHOLE	
	CATCH BASIN	
	FIRE HYDRANT	
	EASEMENT LINE	
—x—x—	FENCE	—x—x—
—UE/UT—	BURIED UTILITY LINE	—UE/UT—
	UTILITY POLE	
—OHE—	OVERHEAD UTILITY LINE	—OHE—
	BUILDING	

LEGEND | 1

COMPOUND PLAN | 4

SCALE: 1/8" = 1'-0" (24x36)
(OR) 1/16" = 1'-0" (11x17)

WISCONSIN NESTOR POPOWICH A-3837 CHICAGO, IL ARCHITECT

"I HEREBY CERTIFY THAT THESE PLANS WERE PREPARED BY ME OR UNDER MY DIRECT SUPERVISION AND THAT I AM A DULY REGISTERED ARCHITECT UNDER THE LAWS OF THE STATE OF WISCONSIN"

DATE: 02/20/17

at&t
930 NATIONAL PARKWAY
SCHAUMBURG, IL 60173

SAC WIRELESS
540 W. MADISON ST.
17TH FLOOR
CHICAGO, IL 60661
www.sacw.com
312.895.4977

A&E
SAC WIRELESS
540 W. MADISON ST.
17TH FLOOR
CHICAGO, IL 60661
www.sacw.com
312.895.4977

NSB– RAW LAND
12716346
MARTINSON
4614 COUNTY HWY A
OREGON, WI 53575

REVISIONS

REV.	DATE	DESCRIPTION	INITIALS
0	02/20/17	FOR CONSTRUCTION	GD
B	12/22/16	ISSUED FOR REVIEW	MI
A	12/08/16	ISSUED FOR REVIEW	MI

NOT FOR CONSTRUCTION UNLESS LABELED AS CONSTRUCTION SET

SHEET TITLE
COMPOUND PLAN & LEGEND

SHEET NUMBER
A2

THE INFORMATION CONTAINED IN THIS SET OF CONSTRUCTION DOCUMENTS IS PROPRIETARY BY NATURE. ANY USE OR DISCLOSURE OTHER THAN THAT WHICH RELATES TO CARRIER SERVICES IS STRICTLY PROHIBITED.

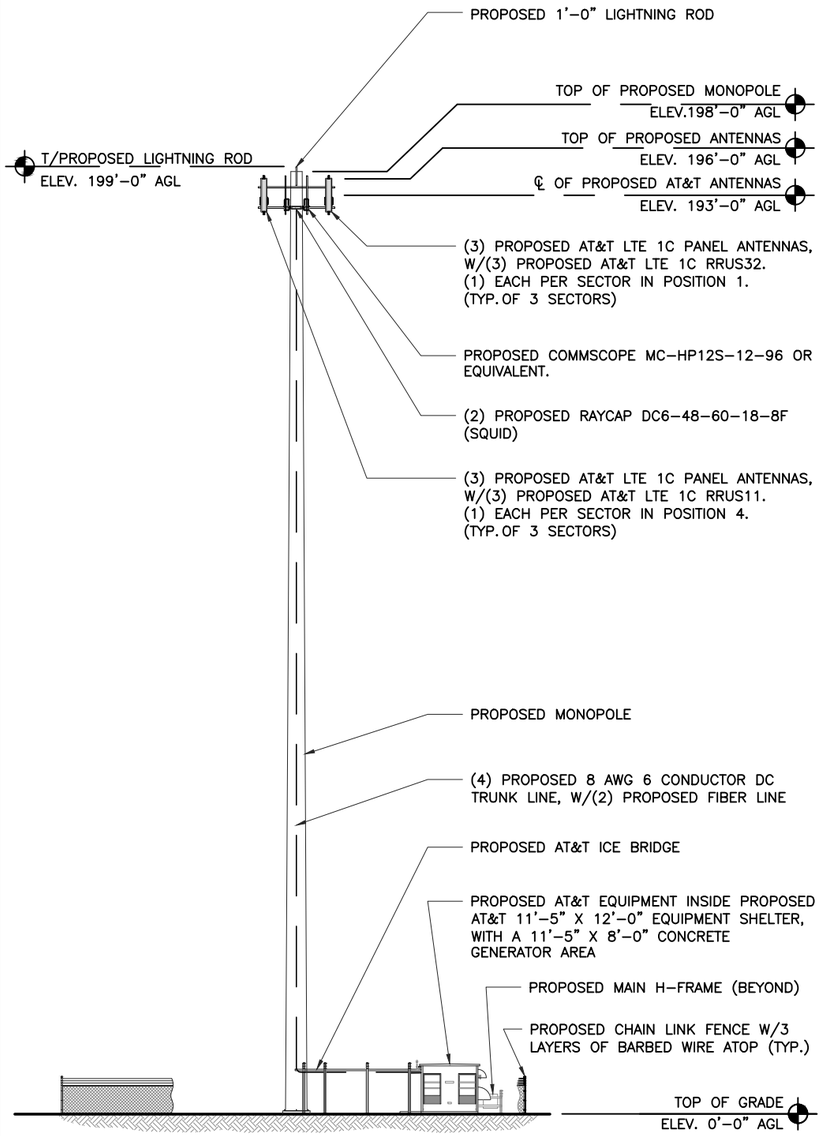

PROPOSED TOWER ELEVATION | 0 4' 8' 16' | SCALE: 1/16" = 1'-0" (24x36) (OR) 1/32" = 1'-0" (11x17) | 4

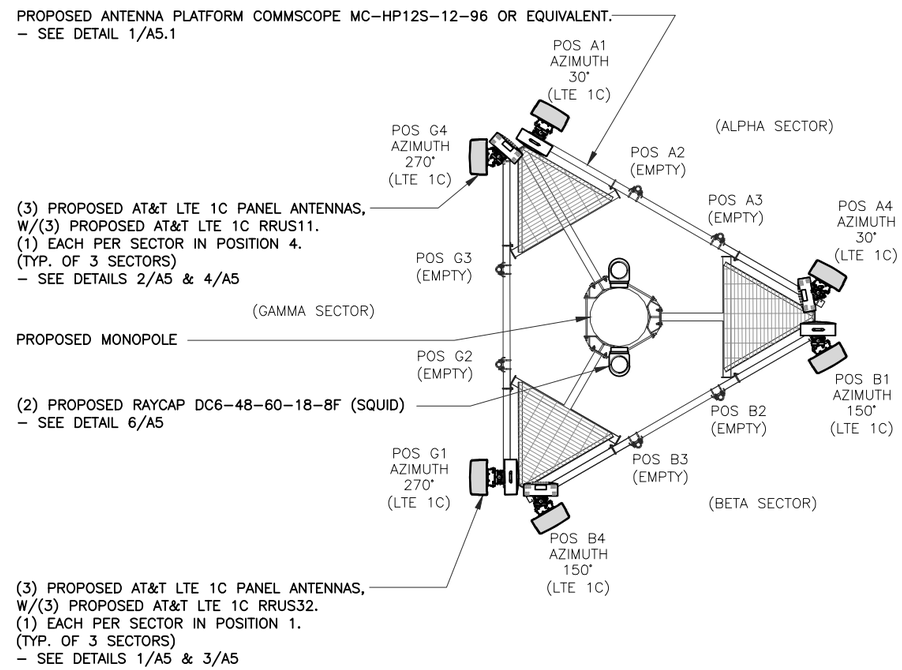

PROPOSED ANTENNA PLAN | 0 1' 4' 8' | SCALE: 3/8" = 1'-0" (24x36) (OR) 1/16" = 1'-0" (11x17) | 3

ANTENNA NOTES:

1. THE SIZE, HEIGHT, AND DIRECTION OF THE ANTENNAS SHALL BE ADJUSTED TO ACHIEVE THE AZIMUTHS SPECIFIED AND LIMIT SHADOWING AND TO MEET THE SYSTEM REQUIREMENTS.
2. CONTRACTOR SHALL VERIFY THE HEIGHT OF THE ANTENNA WITH THE AT&T WIRELESS PROJECT MANAGER.
3. VERIFY TYPE AND SIZE OF TOWER LEG PRIOR TO ORDERING ANY ANTENNA MOUNT.
4. UNLESS NOTED OTHERWISE THE CONTRACTOR MUST PROVIDE ALL MATERIAL NECESSARY.
5. ANTENNA AZIMUTHS ARE DEGREES OFF OF TRUE NORTH, BEARING CLOCKWISE, IN WHICH ANTENNA FACE IS DIRECTED. ALL ANTENNAS (AND SUPPORTING STRUCTURES AS PRACTICAL) SHALL BE ACCURATELY ORIENTED IN THE SPECIFIED DIRECTION.
6. CONTRACTOR SHALL VERIFY ALL RF INFORMATION PRIOR TO CONSTRUCTION.
7. SWEEP TEST SHALL BE PERFORMED BY GENERAL CONTRACTOR AND SUBMITTED TO AT&T WIRELESS CONSTRUCTION SPECIALIST. TEST SHALL BE PERFORMED PER AT&T WIRELESS STANDARDS.

STRUCTURAL NOTES:

1. TOWER STRUCTURAL CALCULATIONS PREPARED BY OTHERS. CONTRACTOR TO VERIFY WITH PROJECT MANAGER TO OBTAIN A COPY
2. CONTRACTOR TO REFER TO TOWER STRUCTURAL CALCULATIONS FOR ADDITIONAL LOADS. NO ERECTION OR MODIFICATION OF TOWER SHALL BE MADE WITHOUT APPROVAL OF STRUCTURAL ENGINEER.

NOTES | NO SCALE | 2

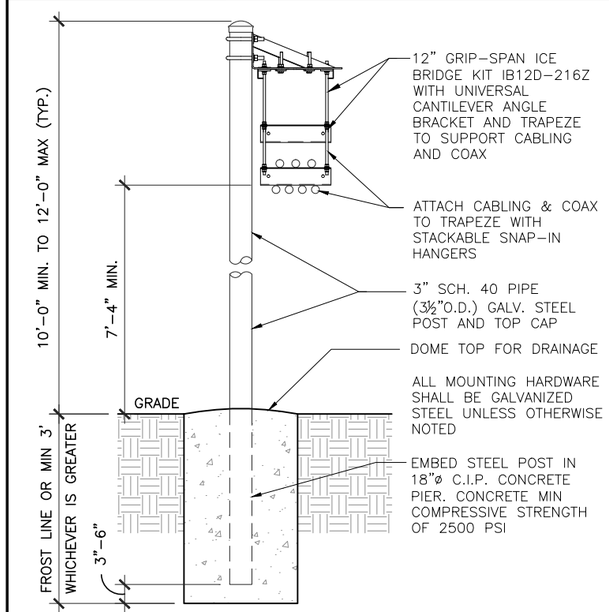

ICE BRIDGE DETAIL | NO SCALE | 1

THE INFORMATION CONTAINED IN THIS SET OF CONSTRUCTION DOCUMENTS IS PROPRIETARY BY NATURE. ANY USE OR DISCLOSURE OTHER THAN THAT WHICH RELATES TO CARRIER SERVICES IS STRICTLY PROHIBITED.

at&t
930 NATIONAL PARKWAY
SCHAUMBURG, IL 60173

SAC WIRELESS
540 W. MADISON ST.
17TH FLOOR
CHICAGO, IL 60661
www.sacw.com
312.895.4977

A&E
SAC WIRELESS
540 W. MADISON ST.
17TH FLOOR
CHICAGO, IL 60661
www.sacw.com
312.895.4977

NSB– RAW LAND
12716346
MARTINSON
4614 COUNTY HWY A
OREGON, WI 53575

REVISIONS

REV.	DATE	DESCRIPTION	INITIALS
0	02/20/17	FOR CONSTRUCTION	GD
B	12/22/16	ISSUED FOR REVIEW	MI
A	12/08/16	ISSUED FOR REVIEW	MI

NOT FOR CONSTRUCTION UNLESS LABELED AS CONSTRUCTION SET

WISCONSIN NESTOR POPOWYCH A-3837 CHICAGO, IL ARCHITECT

"I HEREBY CERTIFY THAT THESE PLANS WERE PREPARED BY ME OR UNDER MY DIRECT SUPERVISION AND THAT I AM A DULY REGISTERED ARCHITECT UNDER THE LAWS OF THE STATE OF WISCONSIN"

DATE: 02/20/17

SHEET TITLE
TOWER ELEVATION & ANTENNA PLAN

SHEET NUMBER
A3

1. CONTRACTOR IS TO REFER TO AT&T'S MOST CURRENT RADIO FREQUENCY DATA SHEET (RFDS) PRIOR TO CONSTRUCTION.
2. CABLE LENGTHS WERE DETERMINED BASED ON THE DESIGN DRAWING. CONTRACTOR TO VERIFY ACTUAL LENGTH DURING PRE-CONSTRUCTION WALK.
3. CONTRACTOR TO USE ROSENBERGER FIBER LINE HANGER COMPONENTS (OR ENGINEER APPROVED EQUAL).

NOTES

NO SCALE | 3

CABLE MARKING LOCATIONS TABLE

NO	LOCATIONS
1	EACH TOP-JUMPER SHALL BE COLOR CODED WITH (1) SET OF 3" WIDE BANDS.
2	EACH MAIN COAX SHALL BE COLOR CODED WITH (1) SET OF 3" WIDE BANDS NEAR THE TOP-JUMPER CONNECTION AND WITH (1) SET OF 3/4" WIDE COLOR BANDS JUST PRIOR TO ENTERING THE BTS OR TRANSMITTER BUILDING.
3	CABLE ENTRY PORT ON THE INTERIOR OF THE SHELTER.
4	ALL BOTTOM JUMPERS SHALL BE COLOR CODED WITH (1) SET OF 3/4" WIDE BANDS ON EACH END OF THE BOTTOM JUMPER.
5	ALL BOTTOM JUMPERS SHALL BE COLOR CODED WITH (1) SET OF 3/4" WIDE BANDS ON EACH END OF THE BOTTOM JUMPER.

1. THE ANTENNA SYSTEM COAX SHALL BE LABELED WITH VINYL TAPE.
2. THE STANDARD IS BASED ON EIGHT COLORED TAPES-RED, BLUE, GREEN, YELLOW, ORANGE, BROWN, WHITE, AND VIOLET. THESE TAPES MUST BE 3/4" WIDE & UV RESISTANT SUCH AS SCOTCH 35 VINYL ELECTRICAL COLOR CODING TAPE AND SHOULD BE READILY AVAILABLE TO THE ELECTRICIAN OR CONTRACTOR ON SITE.
3. USING COLOR BANDS ON THE CABLES, MARK ALL RF CABLE BY SECTOR AND CABLE NUMBER AS SHOWN ON "CABLE COLOR CHART".
4. WHEN AN EXISTING COAXIAL LINE THAT IS INTENDED TO BE A SHARED LINE BETWEEN TECHNOLOGIES IS ENCOUNTERED, THE CONTRACTOR SHALL REMOVE THE EXISTING COLOR CODING SCHEME AND REPLACE IT WITH THE COLOR CODING STANDARD. IN THE ABSENCE OF AN EXISTING COLOR CODING AND TAGGING SCHEME, OR WHEN INSTALLING PROPOSED COAXIAL CABLES, THIS GUIDELINE SHALL BE IMPLEMENTED AT THAT SITE REGARDLESS OF TECHNOLOGY.
5. ALL COLOR CODE TAPE SHALL BE 3M-35 AND SHALL BE INSTALLED USING A MINIMUM OF (3) THREE WRAPS OF TAPE AND SHALL BE NEATLY TRIMMED AND SMOOTHED OUT SO AS TO AVOID UNRAVELING.
6. ALL COLOR BANDS INSTALLED AT THE TOP OF THE TOWER SHALL BE A MINIMUM OF 3" WIDE, AND SHALL HAVE A MINIMUM OF 3/4" OF SPACE BETWEEN EACH COLOR.
7. ALL COLOR CODES SHALL BE INSTALLED SO AS TO ALIGN NEATLY WITH ONE ANOTHER FROM SIDE-TO-SIDE.
8. IF EXISTING CABLES AT THE SITE ALREADY HAVE A COLOR CODING SCHEME AND THEY ARE NOT INTENDED TO BE REUSED OR SHARED WITH THE NEW TECHNOLOGY, THE EXISTING COLOR CODING SCHEME SHALL REMAIN UNTOUCHED.

ANTENNA AND CABLING INFORMATION

NO SCALE | 2

PROPOSED ANTENNA CONFIGURATION AND CABLE SCHEDULE

SECTOR	POS	TECH	ANTENNA	ANTENNA ℄ HEIGHT	AZ	TMA/RRU	DC SURGE AND DISTRIBUTION	CABLE TYPE	CABLE LENGTH	DOWN TILTS
A	1	LTE 1C	SBNHH-1D65B (N)	193' AGL	30°	(1) RRUS32 (N)	(2) RAYCAP (N) DC6-48-60-18-8F	(2) DC TRUNK (N) (1) FIBER (N)	280'	0
	2	EMPTY								
	3	EMPTY								
	4	LTE 1C	SBJAHH-1D65B-DL (N)		30°	(1) RRUS11 (N)		(2) DC TRUNK (N) (1) FIBER (N)		0
B	1	LTE 1C	SBNHH-1D65B (N)	193' AGL	150°	(1) RRUS32 (N)		DC TRUNK (SHARED W/A1) FIBER (SHARED W/A1)	280'	0
	2	EMPTY								
	3	EMPTY								
	4	LTE 1C	SBJAHH-1D65B-DL (N)		150°	(1) RRUS11 (N)		DC TRUNK (SHARED W/A1) FIBER (SHARED W/A1)		0
C	1	LTE 1C	SBNHH-1D65B (N)	193' AGL	270°	(1) RRUS32 (N)		DC TRUNK (SHARED W/A1) FIBER (SHARED W/A1)	280'	0
	2	EMPTY								
	3	EMPTY								
	4	LTE 1C	SBJAHH-1D65B-DL (N)		270°	(1) RRUS11 (N)		DC TRUNK (SHARED W/A1) FIBER (SHARED W/A1)		0

* INCLUDES SAFETY FACTOR OF 20' FT. (10 FT. AT BOTH ENDS OF CABLE RUN). CONTRACTOR TO VERIFY RF DATA WITH AT&T WIRELESS CONSTRUCTION MANAGER AND/OR RF ENGINEER PRIOR TO INSTALLATION

(N) = NEW
(X) = EXISTING
(XR) = EXISTING/RELOCATED
(E) = ELECTRICAL
(M) = MECHANICAL

SCHEDULE

NO SCALE | 1

at&t
930 NATIONAL PARKWAY
SCHAUMBURG, IL 60173

SAC WIRELESS
540 W. MADISON ST.
17TH FLOOR
CHICAGO, IL 60661
www.sacw.com
312.895.4977

A&E
SAC WIRELESS
540 W. MADISON ST.
17TH FLOOR
CHICAGO, IL 60661
www.sacw.com
312.895.4977

NSB- RAW LAND
12716346
MARTINSON
4614 COUNTY HWY A
OREGON, WI 53575

REVISIONS

REV.	DATE	DESCRIPTION	INITIALS
0	02/20/17	FOR CONSTRUCTION	GD
B	12/22/16	ISSUED FOR REVIEW	MI
A	12/08/16	ISSUED FOR REVIEW	MI

NOT FOR CONSTRUCTION UNLESS LABELED AS CONSTRUCTION SET

WISCONSIN NESTOR POPOWYCH A-3837 CHICAGO, IL ARCHITECT

"I HEREBY CERTIFY THAT THESE PLANS WERE PREPARED BY ME OR UNDER MY DIRECT SUPERVISION AND THAT I AM A DULY REGISTERED ARCHITECT UNDER THE LAWS OF THE STATE OF WISCONSIN"

DATE: 02/20/17

SHEET TITLE
SCHEDULE & CABLE NOTES

SHEET NUMBER
A4

THE INFORMATION CONTAINED IN THIS SET OF CONSTRUCTION DOCUMENTS IS PROPRIETARY BY NATURE. ANY USE OR DISCLOSURE OTHER THAN THAT WHICH RELATES TO CARRIER SERVICES IS STRICTLY PROHIBITED.

THE INFORMATION CONTAINED IN THIS SET OF CONSTRUCTION DOCUMENTS IS PROPRIETARY BY NATURE. ANY USE OR DISCLOSURE OTHER THAN THAT WHICH RELATES TO CARRIER SERVICES IS STRICTLY PROHIBITED.

NOT USED | NOT TO SCALE | 8

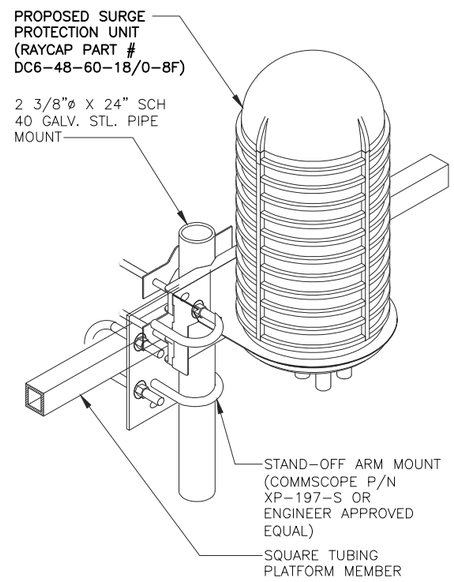

RAYCAP DC6 DETAIL | NOT TO SCALE | 6

ERICCSON RRU11

DIMENSIONS, HxWxD: 19.7"X17.0"x7.2"

WEIGHT, WITHOUT MOUNTING KIT: 22.6796 kg (50 lbs)

STACKING OF RRH'S IS NOT PERMITTED.
NO PAINTING OF RRU'S IS ALLOWED.

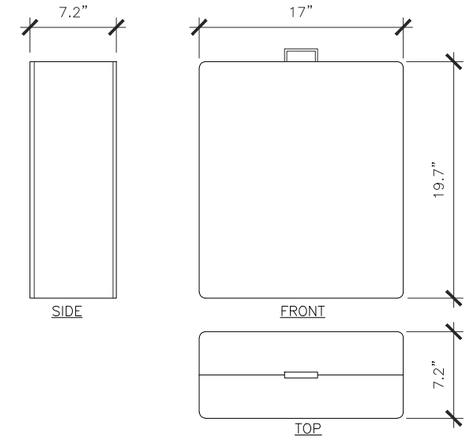

RRU11 DETAIL | NOT TO SCALE | 4

COMMSCOPE ANTENNAS SBJAH4-1D65B-DL

DIMENSIONS, HXWXD:	72"X13.8"X8.2"
SURVIVAL WIND SPEED:	>150 MPH
WEIGHT, WITHOUT MOUNTING:	58.0 LBS. (26.3 kg)
RET SYSTEM WEIGHT:	5.0 LBS.
CONNECTOR:	(12) 4.3-10 FEMALE
CONNECTOR POSITION:	BOTTOM
MOUNTING POLE:	2.4-4.5 INCHES

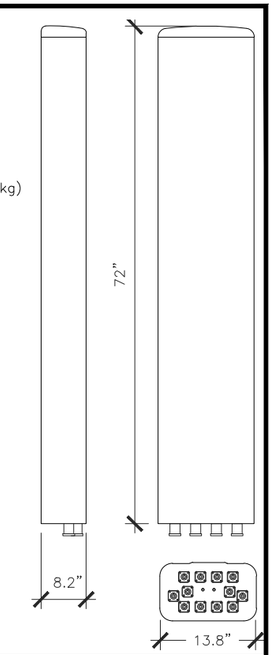

PANEL ANTENNA DETAIL (A4, B4 & G4) | NOT TO SCALE | 2

NOT USED | NOT TO SCALE | 7

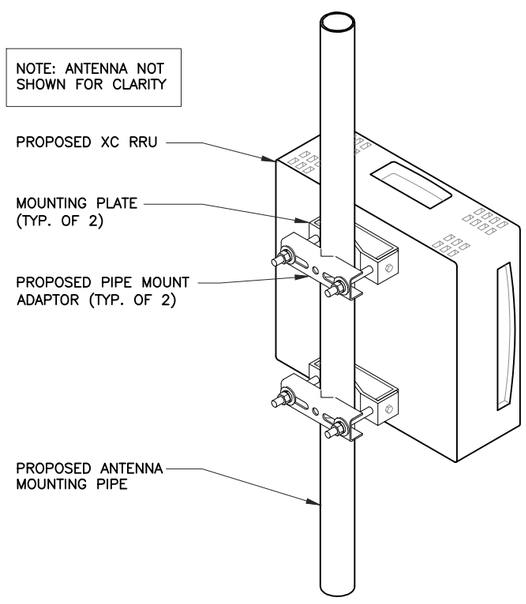

NOT TO SCALE | 5

ERICSSON RRUS 32 B66

DIMENSIONS, HxWxD: 27.2"x12.1"x7.0"

WEIGHT, WITHOUT MOUNTING KIT: 53 lbs (24 kg)

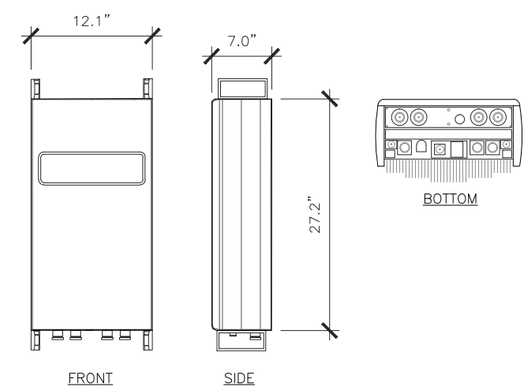

RRUS32 DETAIL

COMMSCOPE ANTENNAS SBNHH-1D65B

DIMENSIONS, HXWXD:	72"X11.9"X7.1"
SURVIVAL WIND SPEED:	>150 MPH
WEIGHT, WITHOUT MOUNTING:	40.6 LBS. (18.4 kg)
RET SYSTEM WEIGHT:	5.0 LBS.
CONNECTOR:	(6) 7/16 DIN FEMALE
CONNECTOR POSITION:	BOTTOM
MOUNTING POLE:	2-4.5 INCHES

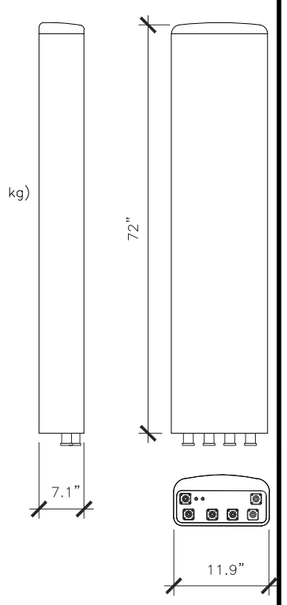

PANEL ANTENNA DETAIL (A1, B1 & G1) | NOT TO SCALE | 1

at&t
930 NATIONAL PARKWAY
SCHAUMBURG, IL 60173

SAC WIRELESS
540 W. MADISON ST.
17TH FLOOR
CHICAGO, IL 60661
www.sacw.com
312.895.4977

A&E
SAC WIRELESS
540 W. MADISON ST.
17TH FLOOR
CHICAGO, IL 60661
www.sacw.com
312.895.4977

NSB- RAW LAND
12716346
MARTINSON
4614 COUNTY HWY A
OREGON, WI 53575

REVISIONS

REV.	DATE	DESCRIPTION	INITIALS
0	02/20/17	FOR CONSTRUCTION	GD
B	12/22/16	ISSUED FOR REVIEW	MI
A	12/08/16	ISSUED FOR REVIEW	MI

NOT FOR CONSTRUCTION UNLESS LABELED AS CONSTRUCTION SET

WISCONSIN
NESTOR POBOWICH
A-3837
CHICAGO, IL
ARCHITECT

"I HEREBY CERTIFY THAT THESE PLANS WERE PREPARED BY ME OR UNDER MY DIRECT SUPERVISION AND THAT I AM A DULY REGISTERED ARCHITECT UNDER THE LAWS OF THE STATE OF WISCONSIN"

DATE: 02/20/17

SHEET TITLE
ANTENNA, RRUS & RAYCAP DETAILS

SHEET NUMBER
A5

THE INFORMATION CONTAINED IN THIS SET OF CONSTRUCTION DOCUMENTS IS PROPRIETARY BY NATURE. ANY USE OR DISCLOSURE OTHER THAN THAT WHICH RELATES TO CARRIER SERVICES IS STRICTLY PROHIBITED.

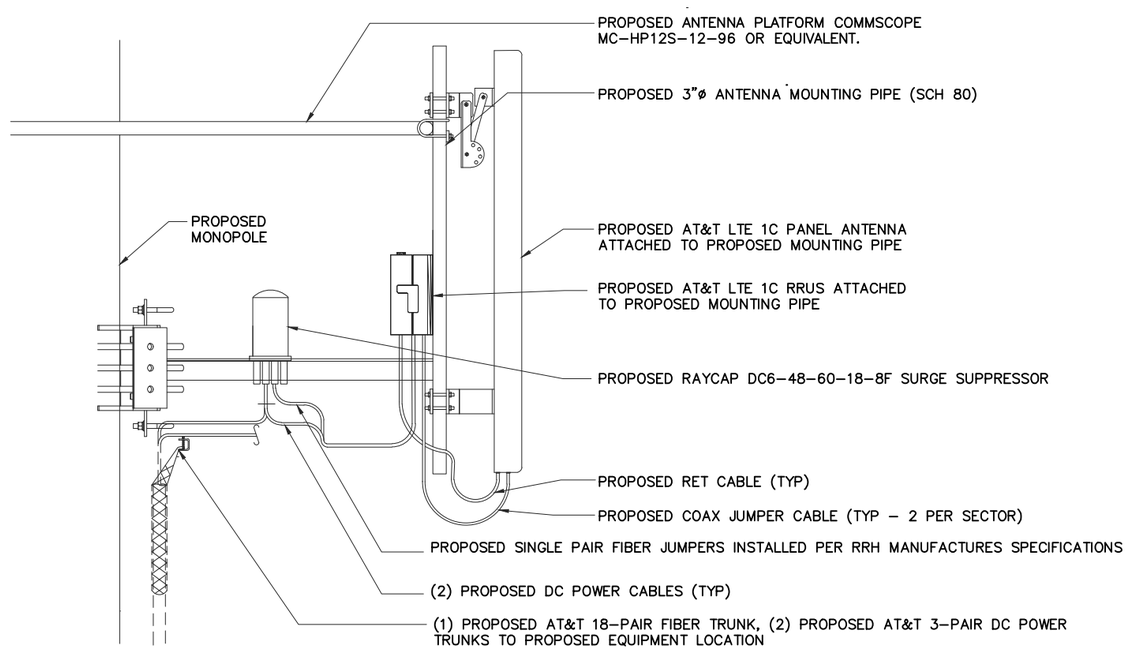

ANTENNA, RRU & RAYCAP DC6 MOUNTING DETAIL

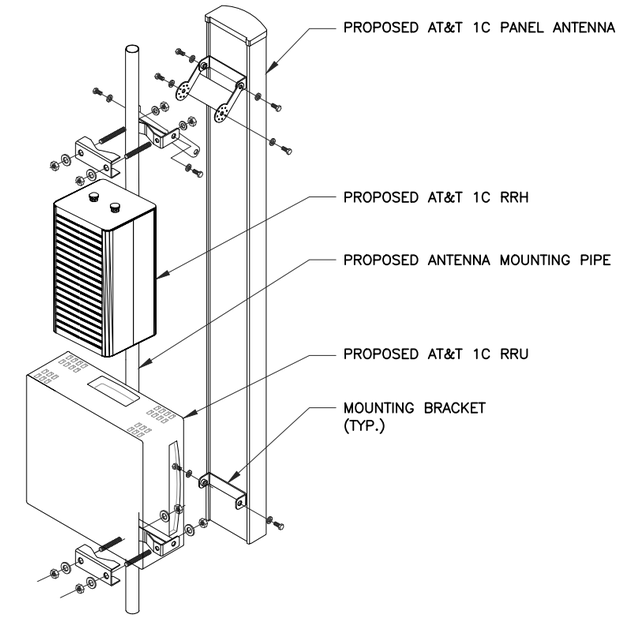

PANEL ANTENNA DETAIL | NOT TO SCALE | 2

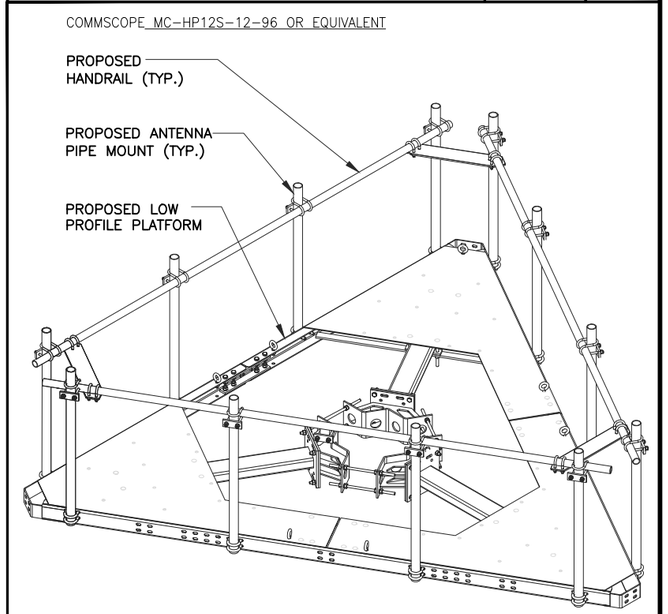

ANTENNA PLATFORM DETAIL | NOT TO SCALE | 1

at&t
930 NATIONAL PARKWAY
SCHAUMBURG, IL 60173

SAC WIRELESS
540 W. MADISON ST.
17TH FLOOR
CHICAGO, IL 60661
www.sacw.com
312.895.4977

A&E
SAC WIRELESS
540 W. MADISON ST.
17TH FLOOR
CHICAGO, IL 60661
www.sacw.com
312.895.4977

NSB- RAW LAND
12716346
MARTINSON
4614 COUNTY HWY A
OREGON, WI 53575

REVISIONS

REV.	DATE	DESCRIPTION	INITIALS
0	02/20/17	FOR CONSTRUCTION	GD
B	12/22/16	ISSUED FOR REVIEW	MI
A	12/08/16	ISSUED FOR REVIEW	MI

NOT FOR CONSTRUCTION UNLESS LABELED AS CONSTRUCTION SET

WISCONSIN NESTOR POBOWYCH A-3837 CHICAGO, IL ARCHITECT

DATE: 02/20/17

"I HEREBY CERTIFY THAT THESE PLANS WERE PREPARED BY ME OR UNDER MY DIRECT SUPERVISION AND THAT I AM A DULY REGISTERED ARCHITECT UNDER THE LAWS OF THE STATE OF WISCONSIN"

SHEET TITLE
DETAILS

SHEET NUMBER
A5.1

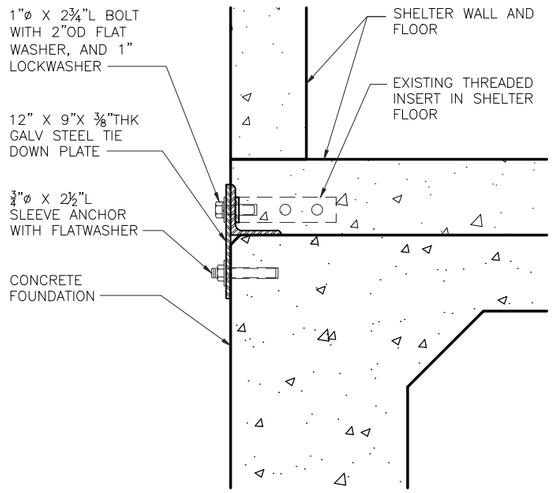

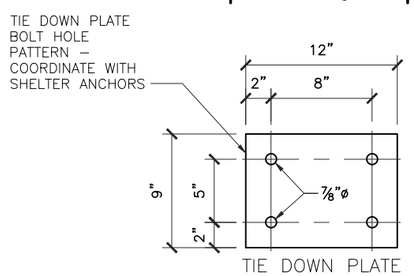

TIE DOWN DETAIL

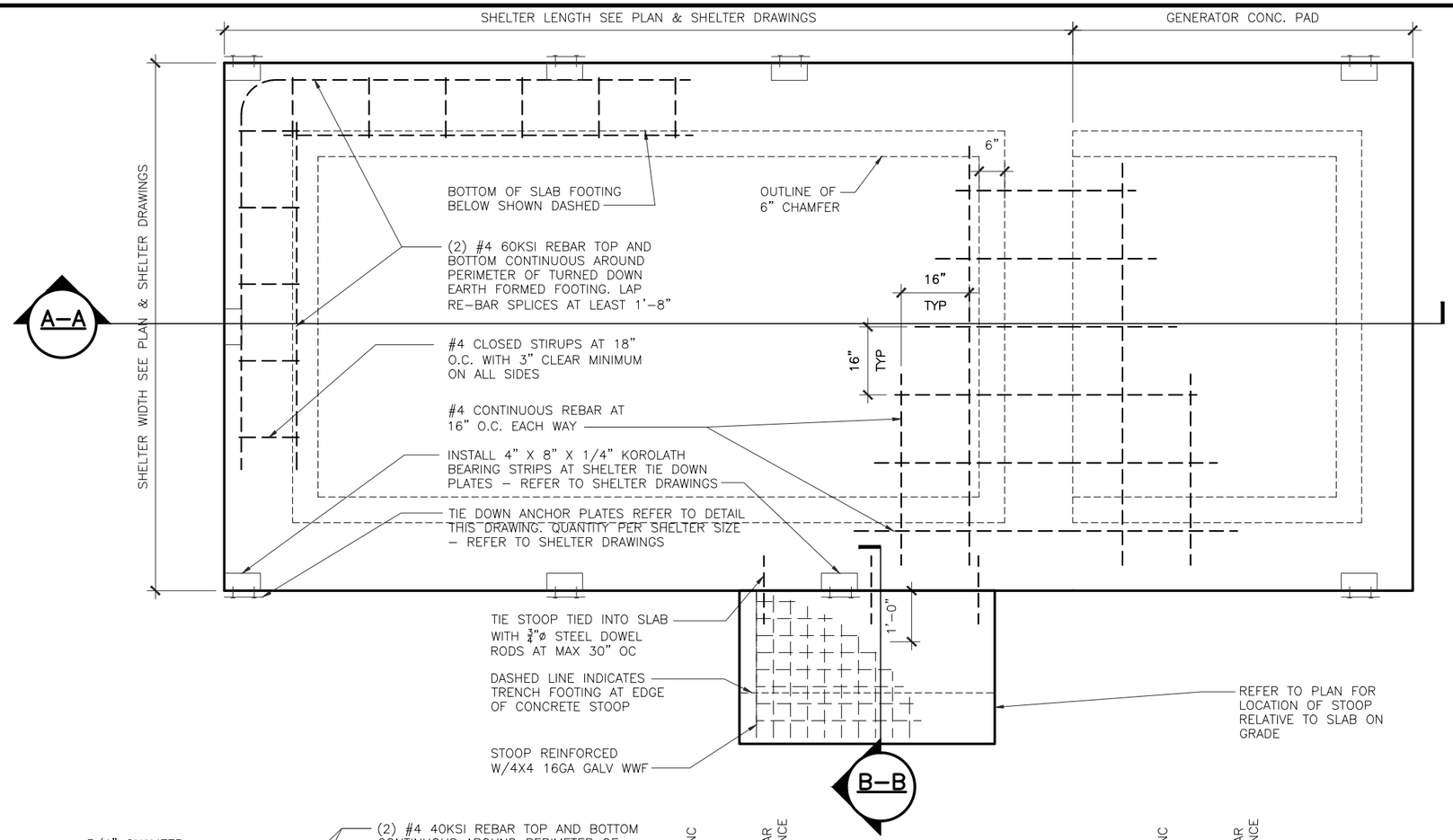

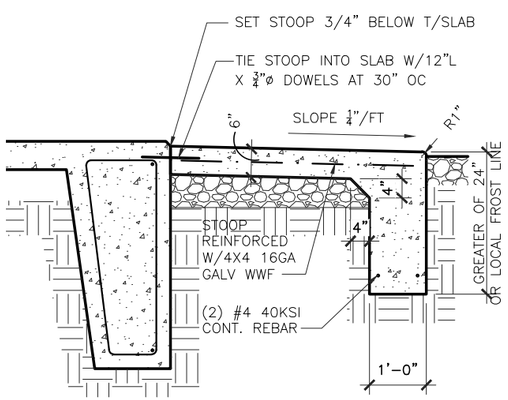

SECTION B–B

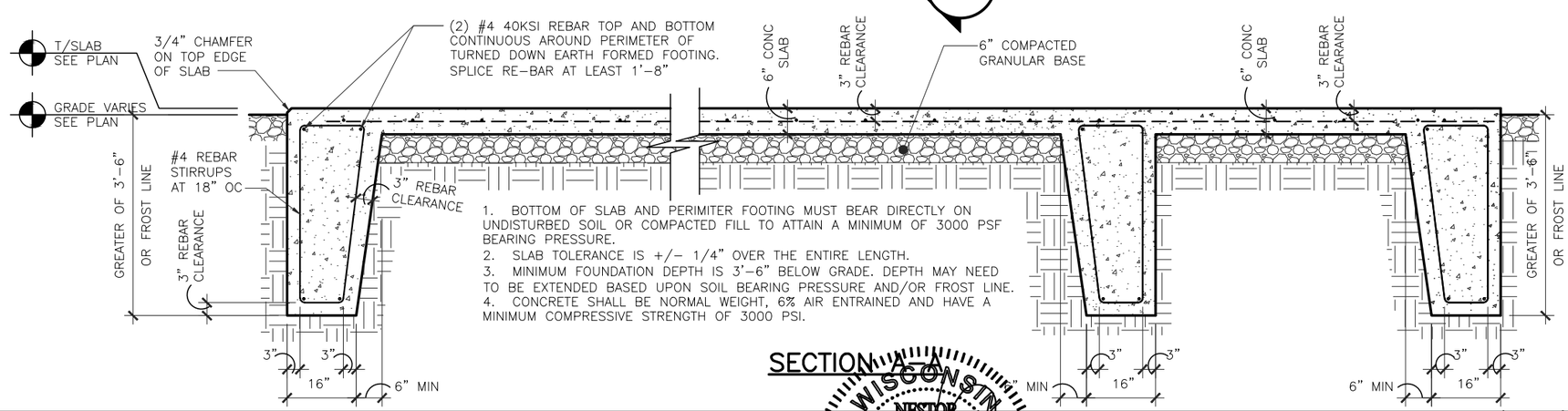

1. BOTTOM OF SLAB AND PERIMITER FOOTING MUST BEAR DIRECTLY ON UNDISTURBED SOIL OR COMPACTED FILL TO ATTAIN A MINIMUM OF 3000 PSF BEARING PRESSURE.
2. SLAB TOLERANCE IS +/– 1/4" OVER THE ENTIRE LENGTH.
3. MINIMUM FOUNDATION DEPTH IS 3'–6" BELOW GRADE. DEPTH MAY NEED TO BE EXTENDED BASED UPON SOIL BEARING PRESSURE AND/OR FROST LINE.
4. CONCRETE SHALL BE NORMAL WEIGHT, 6% AIR ENTRAINED AND HAVE A MINIMUM COMPRESSIVE STRENGTH OF 3000 PSI.

SECTION A–A

SHELTER FOUNDATION DETAILS

SCALE N.T.S. | 1

at&t
930 NATIONAL PARKWAY
SCHAUMBURG, IL 60173

SAC WIRELESS
540 W. MADISON ST.
17TH FLOOR
CHICAGO, IL 60661
www.sacw.com
312.895.4977

A&E
SAC WIRELESS
540 W. MADISON ST.
17TH FLOOR
CHICAGO, IL 60661
www.sacw.com
312.895.4977

NSB– RAW LAND
12716346
MARTINSON
4614 COUNTY HWY A
OREGON, WI 53575

REVISIONS

REV.	DATE	DESCRIPTION	INITIALS
0	02/20/17	FOR CONSTRUCTION	GD
B	12/22/16	ISSUED FOR REVIEW	MI
A	12/08/16	ISSUED FOR REVIEW	MI

NOT FOR CONSTRUCTION UNLESS LABELED AS CONSTRUCTION SET

WISCONSIN NESTOR POPOWYCH A-3837 CHICAGO, IL ARCHITECT

"I HEREBY CERTIFY THAT THESE PLANS WERE PREPARED BY ME OR UNDER MY DIRECT SUPERVISION AND THAT I AM A DULY REGISTERED ARCHITECT UNDER THE LAWS OF THE STATE OF WISCONSIN"

DATE: 02/20/17

SHEET TITLE
SHELTER FOUNDATION DETAILS

SHEET NUMBER
A6

THE INFORMATION CONTAINED IN THIS SET OF CONSTRUCTION DOCUMENTS IS PROPRIETARY BY NATURE. ANY USE OR DISCLOSURE OTHER THAN THAT WHICH RELATES TO CARRIER SERVICES IS STRICTLY PROHIBITED.

MATERIAL DESCRIPTION

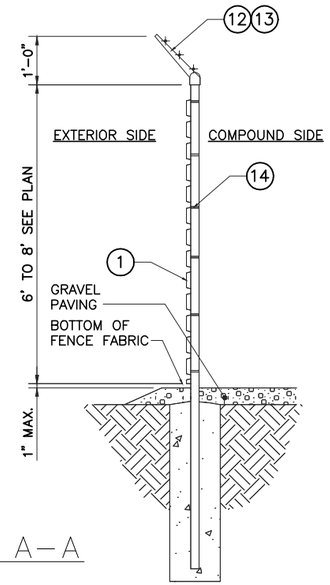

SECTION A–A

1. CHAIN LINK RESIDENTIAL FABRIC: 11–1/2 GAUGE, 2–1/4" MESH; GALVANIZED ASTM–A392, CLASS 2; TWISTED SELVAGE ON TOP, KNUCKLED ON BOTTOM.
2. LINE POSTS: 2–1/2" O.D. PIPE, 16 GAUGE (GALVANIZED) PER ASTM–F1083.
3. CORNER, END AND BRACE POSTS: 2–7/8" O.D. PIPE, SCHEDULE 40 (GALVANIZED).
4. TOP RAIL: 1–5/8" O.D. 17 GAUGE PIPE (GALVANIZED) PER ASTM–F1083.
5. BRACE RAIL: 1–5/8" O.D. 17 GAUGE PIPE (GALVANIZED).
6. DIAGONAL TRUSS ROD: 3/8" GALVANIZED ROD WITH TURNBUCKLE.
7. TENSION BAR: 3/16" X 3/4" GALVANIZED FLAT BAR.
8. BOTTOM TENSION WIRE: GALVANIZED OR ALUMINUM COATED COIL SPRING WIRE, 7 GAUGE.
9. GATE POSTS: 2–7/8" O.D. SCHEDULE 40 PIPE (GALVANIZED).
10. COMBINATION PADLOCK ACCORDING TO AT&T REQUIREMENTS.
11. GATE FRAMES: 1–7/8" O.D. SCHEDULE 40 PIPE (GALVANIZED).
12. BARBED WIRE SUPPORT ARM: SINGLE ARM TYPE (GALVANIZED). ARM SHALL BE INCLINED OUTWARD AT AN ANGLE OF 45 DEGREES.
13. BARBED WIRE: GALVANIZED, ASTM A121 CLASS 3; THREE 14 GAUGE MINIMUM STEEL WIRES WITH 4 POINT ROUND 14 GAUGE BARBS SPACED 4" APART.
14. FABRIC TIES: ALUMINUM BANDS OR WIRES. FABRIC SHALL BE ATTACHED TO THE TOP RAIL AND BOTTOM TENSION WIRE AT 24" CENTERS AND TO THE POSTS AT 15" CENTERS, ALL ON THE COMPOUND SIDE OF THE FENCE.
15. MISCELLANEOUS:
    - A. RAIL COUPLINGS: SLEEVE TYPE, 6" LONG EXPANSION SPRING EVERY FIFTH COUPLING.
    - B. POST TOPS: PRESSED STEEL, MALLEABLE IRON WITH PRESSED STEEL EXTENSION ARM, OR ONE–PIECE ALUMINUM CASTING; WITH HOLE FOR TOP, ALL DESIGNED TO FIT OVER THE OUTSIDE OF THE POSTS AND TO PREVENT ENTRY OF MOISTURE INTO TUBULAR POSTS.
    - C. LATCHES SHALL BE FORKED TYPE AND SHALL BE ARRANGED FOR PADLOCKING WITH THE PADLOCK ACCESSIBLE FROM BOTH SIDES OF THE GATE.
    - D. KEEPERS SHALL CONSIST OF MECHANICAL DEVICES FOR SECURING AND SUPPORTING THE FREE END OF THE GATES WHEN IN THE FULL OPEN POSITION. KEEPERS SHALL BE MOUNTED ON 2–7/8" O.D. PIPE POSTS FILLED WITH CONCRETE AND SET IN CONCRETE FOUNDATIONS.
    - E. INSTALL FENCING PER ASTM–F567.
    - F. INSTALL SWING GATES PER ASTM–F900.
    - G. LOCAL ORDINANCE OF BARBED WIRE PERMIT REQUIREMENT SHALL BE COMPLETED IF REQUIRED.
    - H. USE GALVANIZED HIG–RING WIRE TO MOUNT ALL SIGNS.
    - I. ALL SIGNS MUST BE MOUNTED ON INSIDE OF FENCE.
    - J. ALL POSTS SHALL HAVE "MUSHROOM" SLEEVE EMBEDDED IN CONCRETE.

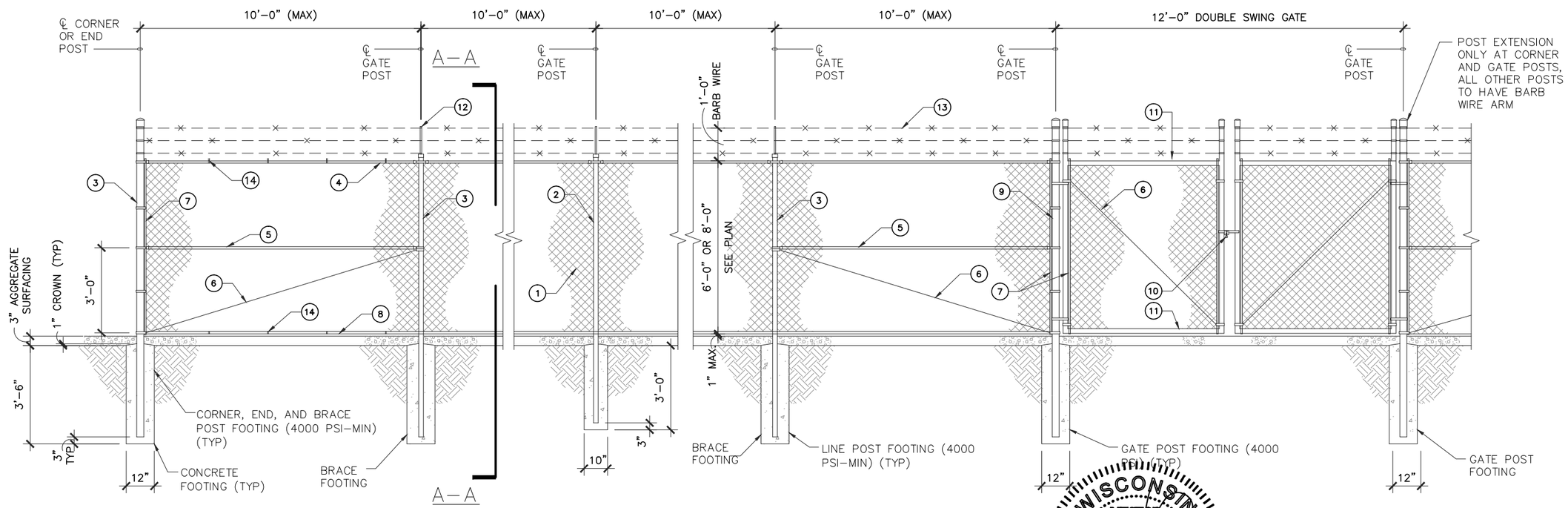

CHAIN LINK FENCE DETAILS

NO SCALE | 1

at&t
930 NATIONAL PARKWAY
SCHAUMBURG, IL 60173

SAC WIRELESS
540 W. MADISON ST.
17TH FLOOR
CHICAGO, IL 60661
www.sacw.com
312.895.4977

A&E
SAC WIRELESS
540 W. MADISON ST.
17TH FLOOR
CHICAGO, IL 60661
www.sacw.com
312.895.4977

NSB– RAW LAND
12716346
MARTINSON
4614 COUNTY HWY A
OREGON, WI 53575

REVISIONS

REV.	DATE	DESCRIPTION	INITIALS
0	02/20/17	FOR CONSTRUCTION	GD
B	12/22/16	ISSUED FOR REVIEW	MI
A	12/08/16	ISSUED FOR REVIEW	MI

NOT FOR CONSTRUCTION UNLESS LABELED AS CONSTRUCTION SET

WISCONSIN NESTOR POPOWYCH A-3837 CHICAGO, IL ARCHITECT

DATE: 02/20/17

"I HEREBY CERTIFY THAT THESE PLANS WERE PREPARED BY ME OR UNDER MY DIRECT SUPERVISION AND THAT I AM A DULY REGISTERED ARCHITECT UNDER THE LAWS OF THE STATE OF WISCONSIN"

SHEET TITLE: FENCE DETAILS

SHEET NUMBER: A7

THE INFORMATION CONTAINED IN THIS SET OF CONSTRUCTION DOCUMENTS IS PROPRIETARY BY NATURE. ANY USE OR DISCLOSURE OTHER THAN THAT WHICH RELATES TO CARRIER SERVICES IS STRICTLY PROHIBITED.

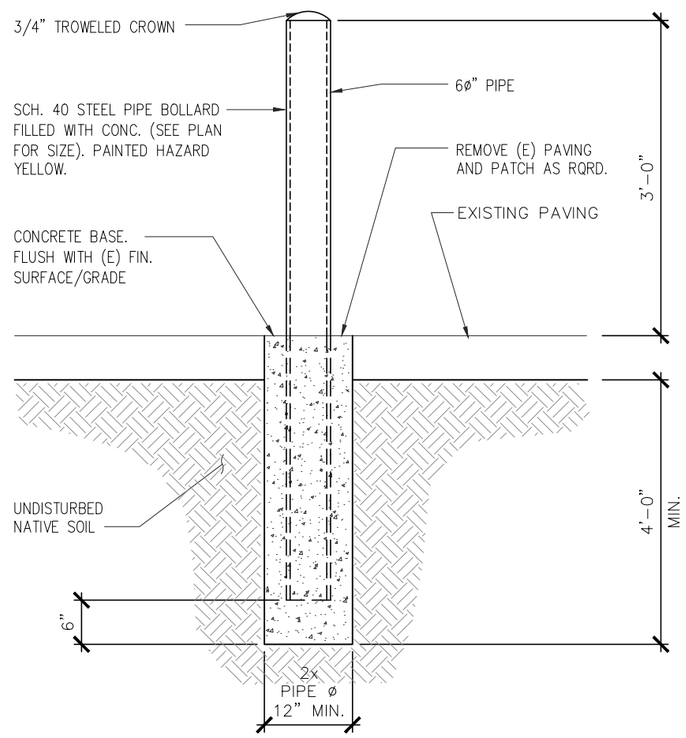

BOLLARD DETAIL | NO SCALE | 2

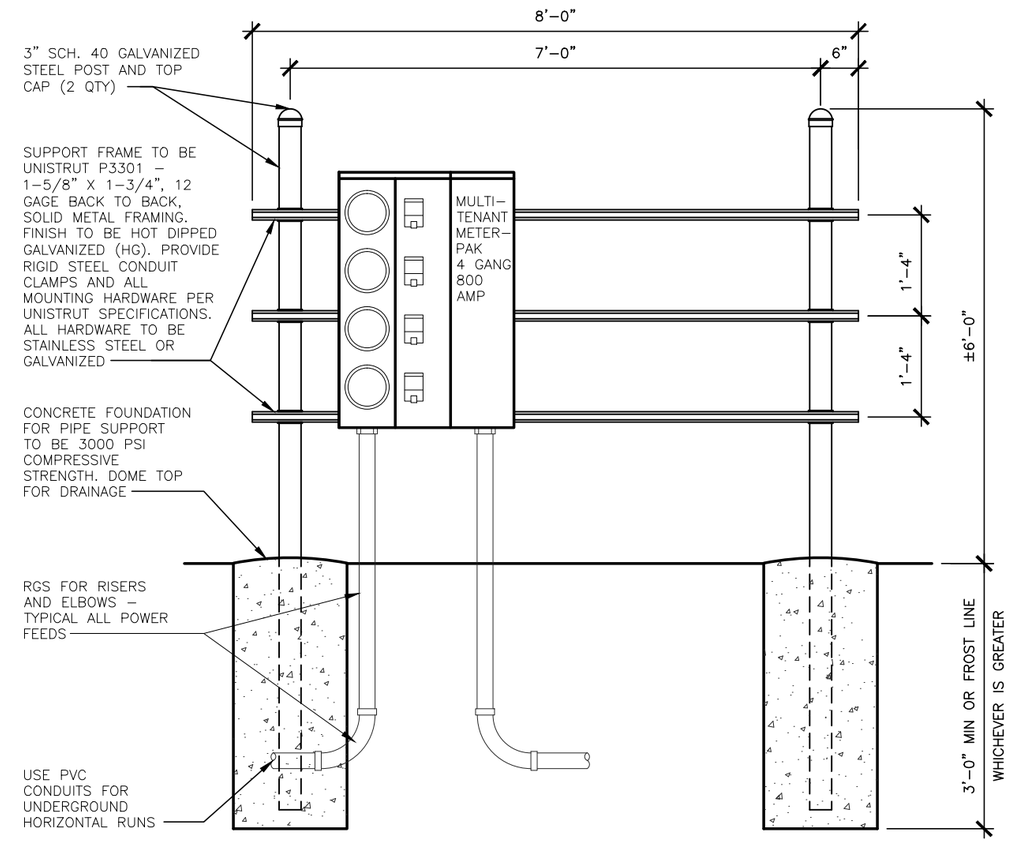

MAIN COMPOUND H-FRAME DETAIL | NO SCALE | 1

WISCONSIN NESTOR POPOWYCH A-3837 CHICAGO, IL ARCHITECT

DATE: 02/20/17

"I HEREBY CERTIFY THAT THESE PLANS WERE PREPARED BY ME OR UNDER MY DIRECT SUPERVISION AND THAT I AM A DULY REGISTERED ARCHITECT UNDER THE LAWS OF THE STATE OF WISCONSIN"

at&t
930 NATIONAL PARKWAY
SCHAUMBURG, IL 60173

SAC WIRELESS
540 W. MADISON ST.
17TH FLOOR
CHICAGO, IL 60661
www.sacw.com
312.895.4977

A&E
SAC WIRELESS
540 W. MADISON ST.
17TH FLOOR
CHICAGO, IL 60661
www.sacw.com
312.895.4977

NSB– RAW LAND
12716346
MARTINSON
4614 COUNTY HWY A
OREGON, WI 53575

REVISIONS

REV.	DATE	DESCRIPTION	INITIALS
0	02/20/17	FOR CONSTRUCTION	GD
B	12/22/16	ISSUED FOR REVIEW	MI
A	12/08/16	ISSUED FOR REVIEW	MI

NOT FOR CONSTRUCTION UNLESS LABELED AS CONSTRUCTION SET

SHEET TITLE
SITE DETAILS

SHEET NUMBER
A8

THE INFORMATION CONTAINED IN THIS SET OF CONSTRUCTION DOCUMENTS IS PROPRIETARY BY NATURE. ANY USE OR DISCLOSURE OTHER THAN THAT WHICH RELATES TO CARRIER SERVICES IS STRICTLY PROHIBITED.

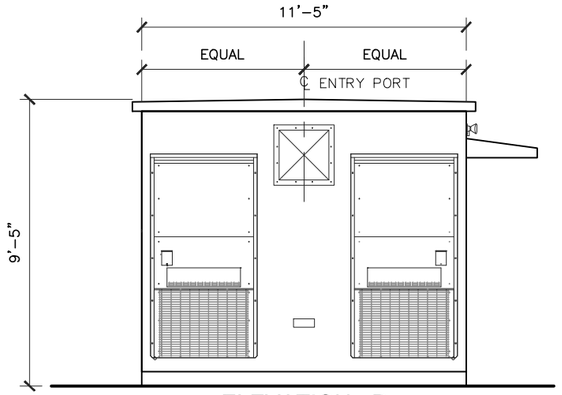

ELEVATION - D

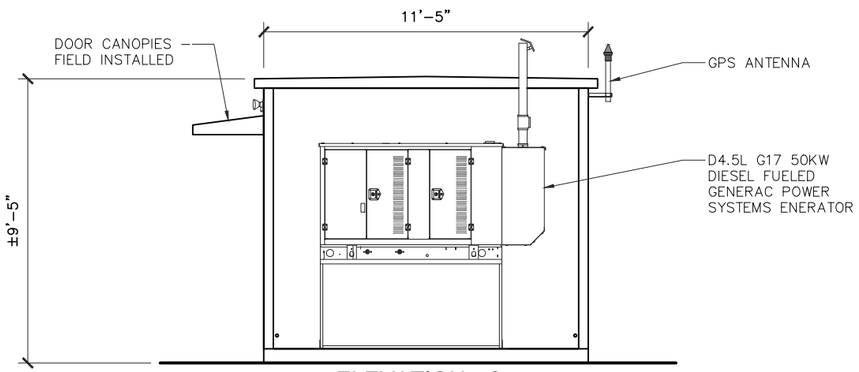

ELEVATION - C

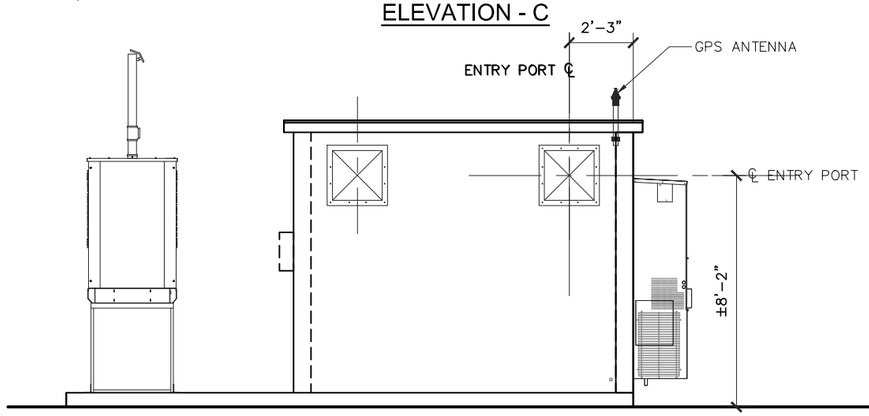

ELEVATION - B

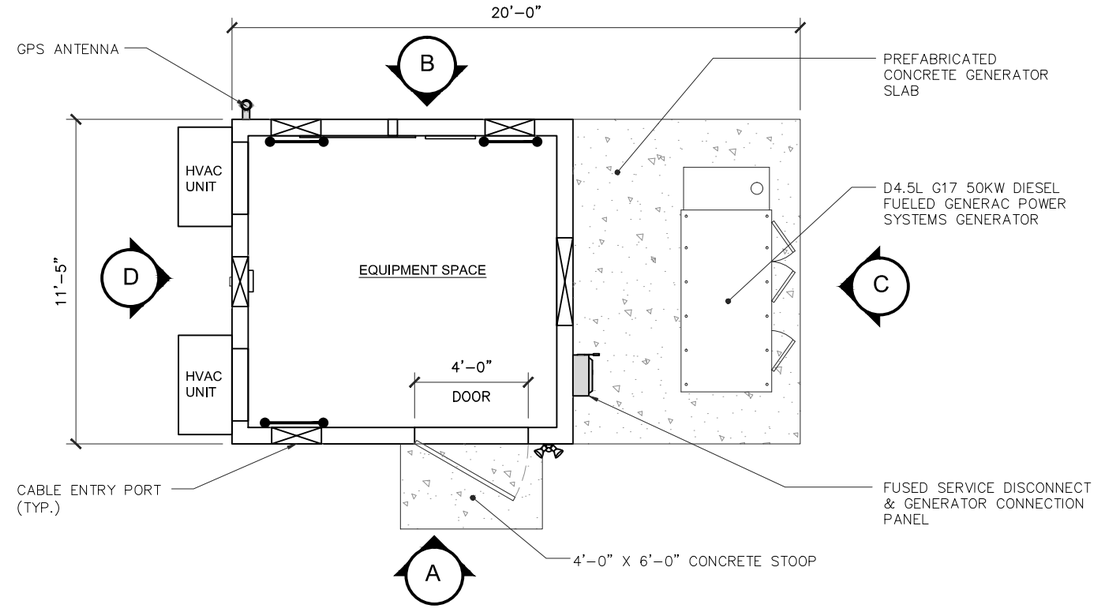

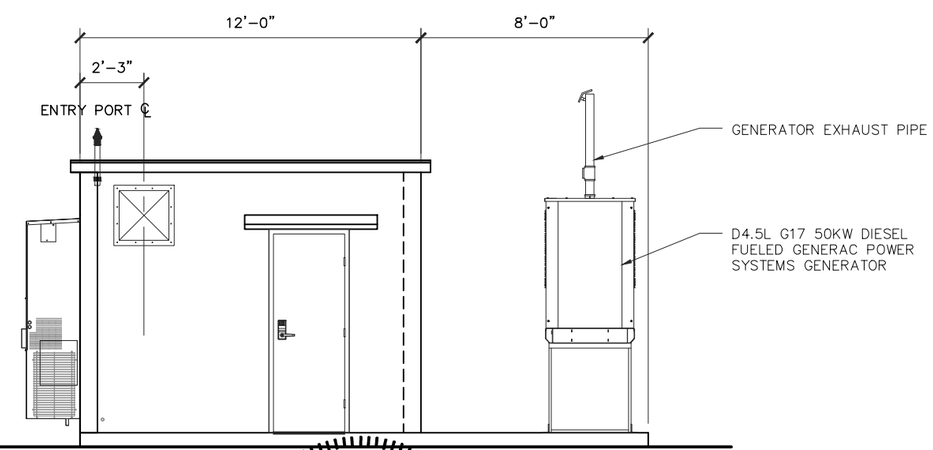

ELEVATION - A

SHELTER PLAN AND ELEVATIONS

0 1' 2' 3'

SCALE: 3/8" = 1'-0" (24x36)
(OR) 3/16" = 1'-0" (11x17)

1

at&t
930 NATIONAL PARKWAY
SCHAUMBURG, IL 60173

SAC WIRELESS
540 W. MADISON ST.
17TH FLOOR
CHICAGO, IL 60661
www.sacw.com
312.895.4977

A&E
SAC WIRELESS
540 W. MADISON ST.
17TH FLOOR
CHICAGO, IL 60661
www.sacw.com
312.895.4977

NSB– RAW LAND
12716346
MARTINSON
4614 COUNTY HWY A
OREGON, WI 53575

REVISIONS

REV.	DATE	DESCRIPTION	INITIALS
0	02/20/17	FOR CONSTRUCTION	GD
B	12/22/16	ISSUED FOR REVIEW	MI
A	12/08/16	ISSUED FOR REVIEW	MI

NOT FOR CONSTRUCTION UNLESS LABELED AS CONSTRUCTION SET

WISCONSIN
NESTOR POPOWYCH
A-3837
CHICAGO, IL
ARCHITECT

"I HEREBY CERTIFY THAT THESE PLANS WERE PREPARED BY ME OR UNDER MY DIRECT SUPERVISION AND THAT I AM A DULY REGISTERED ARCHITECT UNDER THE LAWS OF THE STATE OF WISCONSIN"

DATE: 02/20/17

SHEET TITLE
SHELTER PLAN AND ELEVATIONS

SHEET NUMBER
A9

THE INFORMATION CONTAINED IN THIS SET OF CONSTRUCTION DOCUMENTS IS PROPRIETARY BY NATURE. ANY USE OR DISCLOSURE OTHER THAN THAT WHICH RELATES TO CARRIER SERVICES IS STRICTLY PROHIBITED.

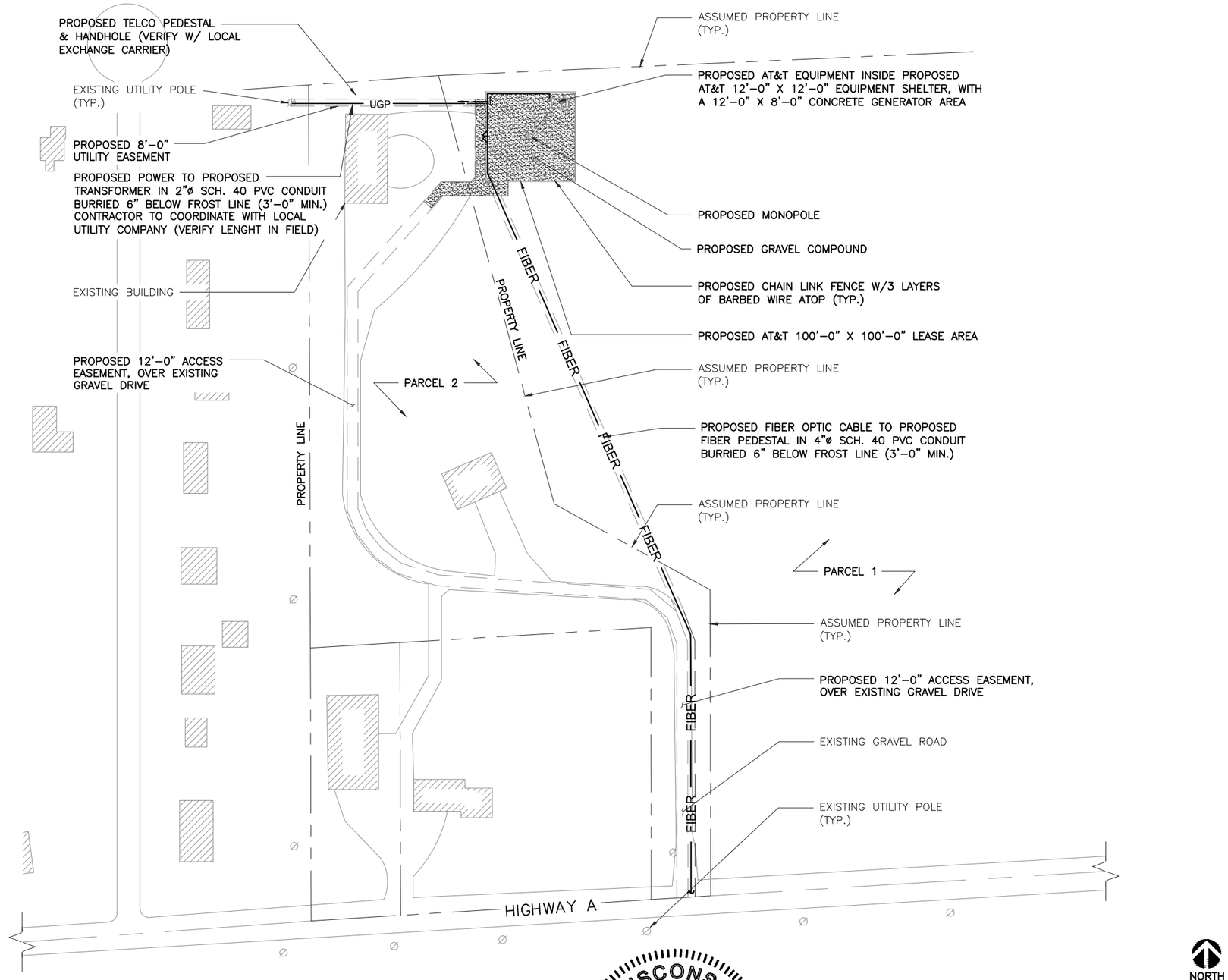

UTILITY PLAN

0 10' 20' 30'

SCALE: 1/32" = 1'-0" (24x36)
(OR) 1/64" = 1'-0" (11x17)

1

THE INFORMATION CONTAINED IN THIS SET OF CONSTRUCTION DOCUMENTS IS PROPRIETARY BY NATURE. ANY USE OR DISCLOSURE OTHER THAN THAT WHICH RELATES TO CARRIER SERVICES IS STRICTLY PROHIBITED.

at&t
930 NATIONAL PARKWAY
SCHAUMBURG, IL 60173

SAC WIRELESS
540 W. MADISON ST.
17TH FLOOR
CHICAGO, IL 60661
www.sacw.com
312.895.4977

A&E
SAC WIRELESS
540 W. MADISON ST.
17TH FLOOR
CHICAGO, IL 60661
www.sacw.com
312.895.4977

NSB– RAW LAND
12716346
MARTINSON
4614 COUNTY HWY A
OREGON, WI 53575

REVISIONS

REV.	DATE	DESCRIPTION	INITIALS
0	02/20/17	FOR CONSTRUCTION	GD
B	12/22/16	ISSUED FOR REVIEW	MI
A	12/08/16	ISSUED FOR REVIEW	MI

NOT FOR CONSTRUCTION UNLESS LABELED AS CONSTRUCTION SET

WISCONSIN
NESTOR POPOWYCH
A-3837
CHICAGO, IL
ARCHITECT

DATE: 02/20/17

"I HEREBY CERTIFY THAT THESE PLANS WERE PREPARED BY ME OR UNDER MY DIRECT SUPERVISION AND THAT I AM A DULY REGISTERED ARCHITECT UNDER THE LAWS OF THE STATE OF WISCONSIN"

SHEET TITLE
UTILITY PLAN

SHEET NUMBER
E1

THE INFORMATION CONTAINED IN THIS SET OF CONSTRUCTION DOCUMENTS IS PROPRIETARY BY NATURE. ANY USE OR DISCLOSURE OTHER THAN THAT WHICH RELATES TO CARRIER SERVICES IS STRICTLY PROHIBITED.

OVERHEAD POWER	OHP — OHP
UNDERGROUND POWER	UGP — UGP
OVERHEAD UTILITIES	OHU — OHU
UNDERGROUND TELCO	UGT — UGT
UNDERGROUND POWER AND TELCO	UGP/UGT — UGP/UGT
ABOVE GROUND POWER (PROPOSED DC POWER CABLE)	AGP — AGP — AGP
ABOVE GROUND TELCO (PROPOSED FIBER OPTIC CABLE)	AGT — AGT — AGT

1. ALL UNDERGROUND CONDUITS SHALL BE SCH 40 PVC. EXCEPT THAT ELBOWS AND RISERS SHALL BE RMC ALL UNDERGROUND ELBOWS SHALL BE SWEEPING BENDS. 2'–0" MINIMUM SHALL BE REQUIRED.
2. THE TELEPHONE SERVICE CABLES SHOULD BE INSTALLED IN RIGID METAL CONDUIT, (10'–0") TEN FEET IN LENGTH BEFORE ENTERING A SHELTER OR BUILDING PER AT&T STANDARD ATT–TP 26416.
3. TWO CONDUITS ARE SHOWN IN DETAIL 2, ALTHOUGH MULTIPLE CONDUITS CAN BE PLACED IN THE SAME TRENCH. A MINIMUM SEPARATION IS REQUIRED PER THE LOCAL JURISDICTIONS AND UTILITY COMPANIES. IN ALL OTHER CASES, USE THE CONDUIT SPACING SCHEDULE TO MAINTAIN MINIMUM SPACING BETWEEN THE EXTERIOR WALL TO EXTERIOR WALL SEPARATION OF CONDUITS.
4. CONTRACTOR SHALL RESTORE THE TRENCH TO ITS ORIGINAL CONDITIONS BY EITHER SEEDING OR SODDING GRASS AREAS, OR REPLACING ASPHALT OR CONCRETE AREAS TO ITS ORIGINAL CROSS SECTION.
5. TRENCHING SAFETY; INCLUDING, BUT NOT LIMITED TO SOIL CLASSIFICATION, SLOPING, AND SHORING, SHALL BE GOVERNED BY THE CURRENT OSHA TRENCHING AND EXCAVATION SAFETY STANDARDS.
6. ALL CONDUITS SHALL BE INSTALLED IN COMPLIANCE WITH THE NATIONAL ELECTRIC CODE (NEC) OR AS REQUIRED BY THE LOCAL JURISDICTION.

LEGEND — NOT TO SCALE — 2

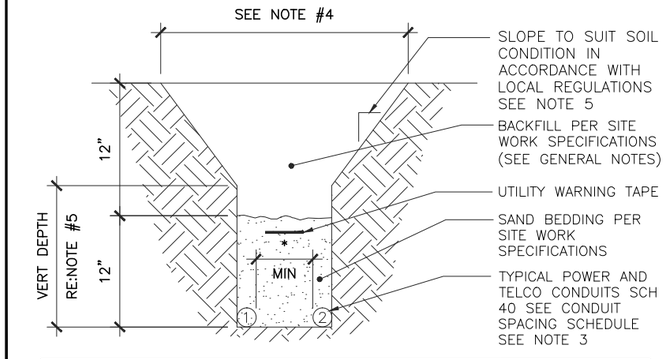

CONDUIT SPACING SCHEDULE

CONDUIT #1	MINIMUM CONDUIT SEPARATION	CONDUIT #2
POWER	* = 6 INCHES	POWER
POWER	* = 12 INCHES	TELCO, COMMUNICATIONS & CONTROL CIRCUITS
TELCO, COMMUNICATIONS & CONTROL CIRCUITS	* = 6 INCHES	TELCO, COMMUNICATIONS & CONTROL CIRCUITS

NOT USED

0 6" 1' 2'
SCALE: 1/2" = 1'-0" (24x36)
(OR) 1/4" = 1'-0" (11x17)

TRENCH DETAIL — NOT TO SCALE — 1

at&t
930 NATIONAL PARKWAY
SCHAUMBURG, IL 60173

SAC WIRELESS
540 W. MADISON ST.
17TH FLOOR
CHICAGO, IL 60661
www.sacw.com
312.895.4977

A&E
SAC WIRELESS
540 W. MADISON ST.
17TH FLOOR
CHICAGO, IL 60661
www.sacw.com
312.895.4977

NSB– RAW LAND
12716346
MARTINSON
4614 COUNTY HWY A
OREGON, WI 53575

REVISIONS

REV.	DATE	DESCRIPTION	INITIALS
0	02/20/17	FOR CONSTRUCTION	GD
B	12/22/16	ISSUED FOR REVIEW	MI
A	12/08/16	ISSUED FOR REVIEW	MI

NOT FOR CONSTRUCTION UNLESS LABELED AS CONSTRUCTION SET

WISCONSIN NESTOR POPOWYCH A-3837 CHICAGO, IL ARCHITECT

"I HEREBY CERTIFY THAT THESE PLANS WERE PREPARED BY ME OR UNDER MY DIRECT SUPERVISION AND THAT I AM A DULY REGISTERED ARCHITECT UNDER THE LAWS OF THE STATE OF WISCONSIN"

DATE: 02/20/17

SHEET TITLE
LEGEND AND DETAILS

SHEET NUMBER
E2

NO	FROM	TO	CONFIGURATION
1	TRANSFORMER	UTILITY METER	(3) 3/0, (1) #4 AWG GND
2	SERVICE DISCONNECT	TRANSFER SWITCH	(3) 3/0, (1) #4 AWG GND
3	TRANSFER SWITCH	AC LOAD CENTER	(3) 3/0, (1) #4 AWG GND
4	AC LOAD CENTER	EMERSON RECTIFIER #1	(2) #10, (1) #10 AWG GND
5	AC LOAD CENTER	EMERSON RECTIFIER #2	(2) #10, (1) #10 AWG GND
6	AC LOAD CENTER	EMERSON RECTIFIER #3	(2) #10, (1) #10 AWG GND
7	AC LOAD CENTER	EMERSON RECTIFIER #4	(2) #10, (1) #10 AWG GND
8	AC LOAD CENTER	EMERSON RECTIFIER #5	(2) #10, (1) #10 AWG GND
9	AC LOAD CENTER	EMERSON RECTIFIER #6	(2) #10, (1) #10 AWG GND
10	AC LOAD CENTER	EMERSON RECTIFIER #7	(2) #10, (1) #10 AWG GND
11	AC LOAD CENTER	EXTERIOR GFCI	(1) #12 BLK, (1) #12 WHT, (1) #12 GND
12	AC LOAD CENTER	HVAC #1	(1) #6 THHN/THWN, (1) #10 AWG GND
13	AC LOAD CENTER	HVAC #2	(1) #6 THHN/THWN, (1) #10 AWG GND
14	AC LOAD CENTER	POWER FAIL RELAY	(2) #12 THHN/THWN, (1) #12 NUET, (1) #12 AWG GND
15	AC LOAD CENTER	INTERIOR RECEPTACLES	(1) #12 BLK, (1) #12 WHT, (1) #12 AWG GND
16	AC LOAD CENTER	INTERIOR LIGHTS	(1) #12 BLK, (1) #12 WHT, (1) #12 AWG GND
17	AC LOAD CENTER	EXTERIOR LIGHTS	(1) #12 BLK, (1) #12 WHT, (1) #12 AWG GND

NO	FROM	TO	CONFIGURATION
18	AC LOAD CENTER	GEN BATTERY CHARGER	(1) #12 BLK, (1) #12 WHT, (1) #12 AWG GND
19	AC LOAD CENTER	GENERATOR HEATER	(1) #12 BLK, (1) #12 WHT, (1) #12 AWG GND
20	AC LOAD CENTER	TVSS	(2) #6 BLK, (1) #6 WHT, (1) #10 AWG GND

1. CONTRACTOR SHALL INSPECT THE EXISTING CONDITIONS PRIOR TO SUBMITTING A BID. ANY QUESTIONS ARISING DURING THE BID PERIOD IN REGARDS TO THE CONTRACTOR'S FUNCTIONS, THE SCOPE OF WORK, OR ANY OTHER ISSUE RELATED TO THIS PROJECT SHALL BE BROUGHT UP DURING THE BID PERIOD WITH THE PROJECT MANAGER FOR CLARIFICATION, NOT AFTER THE CONTRACT HAS BEEN AWARDED.

2. ALL ELECTRICAL WORK SHALL BE DONE IN ACCORDANCE WITH CURRENT NATIONAL ELECTRICAL CODES AND ALL STATE AND LOCAL CODES, LAWS, AND ORDINANCES. PROVIDE ALL COMPONENTS AND WIRING SIZES AS REQUIRED TO MEET NEC STANDARDS.

3. LOCATION OF EQUIPMENT, CONDUIT AND DEVICES SHOWN ON THE DRAWINGS ARE APPROXIMATE AND SHALL BE COORDINATED WITH FIELD CONDITIONS PRIOR TO CONSTRUCTION.

4. CONDUIT ROUGH–IN SHALL BE COORDINATED WITH THE MECHANICAL EQUIPMENT TO AVOID LOCATION CONFLICTS. VERIFY WITH THE MECHANICAL EQUIPMENT CONTRACTOR AND COMPLY AS REQUIRED.

5. CONTRACTOR SHALL PROVIDE ALL BREAKERS, CONDUITS AND CIRCUITS AS REQUIRED FOR A COMPLETE SYSTEM.

6. CONTRACTOR SHALL PROVIDE PULL BOXES AND JUNCTION BOXES AS REQUIRED BY THE NEC ARTICLE 314.

7. CONTRACTOR SHALL PROVIDE ALL STRAIN RELIEF AND CABLE SUPPORTS FOR ALL CABLE ASSEMBLIES. INSTALLATION SHALL BE IN ACCORDANCE WITH MANUFACTURER'S SPECIFICATIONS AND RECOMMENDATIONS.

8. ALL DISCONNECTS AND CONTROLLING DEVICES SHALL BE PROVIDED WITH ENGRAVED PHENOLIC NAMEPLATES INDICATION EQUIPMENT CONTROLLED, BRANCH CIRCUITS INSTALLED ON, AND PANEL FIELD LOCATIONS FED FROM.

9. INSTALL AN EQUIPMENT GROUNDING CONDUCTOR IN ALL CONDUITS PER THE SPECIFICATIONS AND NEC 250. THE EQUIPMENT GROUNDING CONDUCTORS SHALL BE BONDED AT ALL JUNCTION BOXES, PULL BOXES, AND ALL DISCONNECT SWITCHES, AND EQUIPMENT CABINETS.

10. ALL NEW MATERIAL SHALL HAVE A U.L. LABEL.

11. PANEL SCHEDULE LOADING AND CIRCUIT ARRANGEMENTS REFLECT POST–CONSTRUCTION EQUIPMENT.

12. CONTRACTOR SHALL BE RESPONSIBLE FOR AS–BUILT PANEL SCHEDULE AND SITE DRAWINGS.

13. DC POWER WIRING SHALL BE COLOR CODED AT EACH END FOR IDENTIFYING +24V AND –48V CONDUCTOR WIRING. RED MARKINGS SHALL IDENTIFY +24V. BLUE MARKINGS SHALL IDENTIFY –48V. REFER TO ATT–002–290–701.

14. DC POWER WIRING SIZE 14 AWG TO 10 AWG SHALL BE TELCOFLEX III. DC POWER WIRING 8 AWG AND LARGER SHALL BE TELCOFLEX IV. REFER TO ATT–002–290–701.

15. LTE POWER WIRING SHALL BE ACCORDANCE WITH ATT–002–290–531.

REFERENCE SHELTER SHOP DRAWINGS FOR PANEL LOAD CENTER SCHEDULE

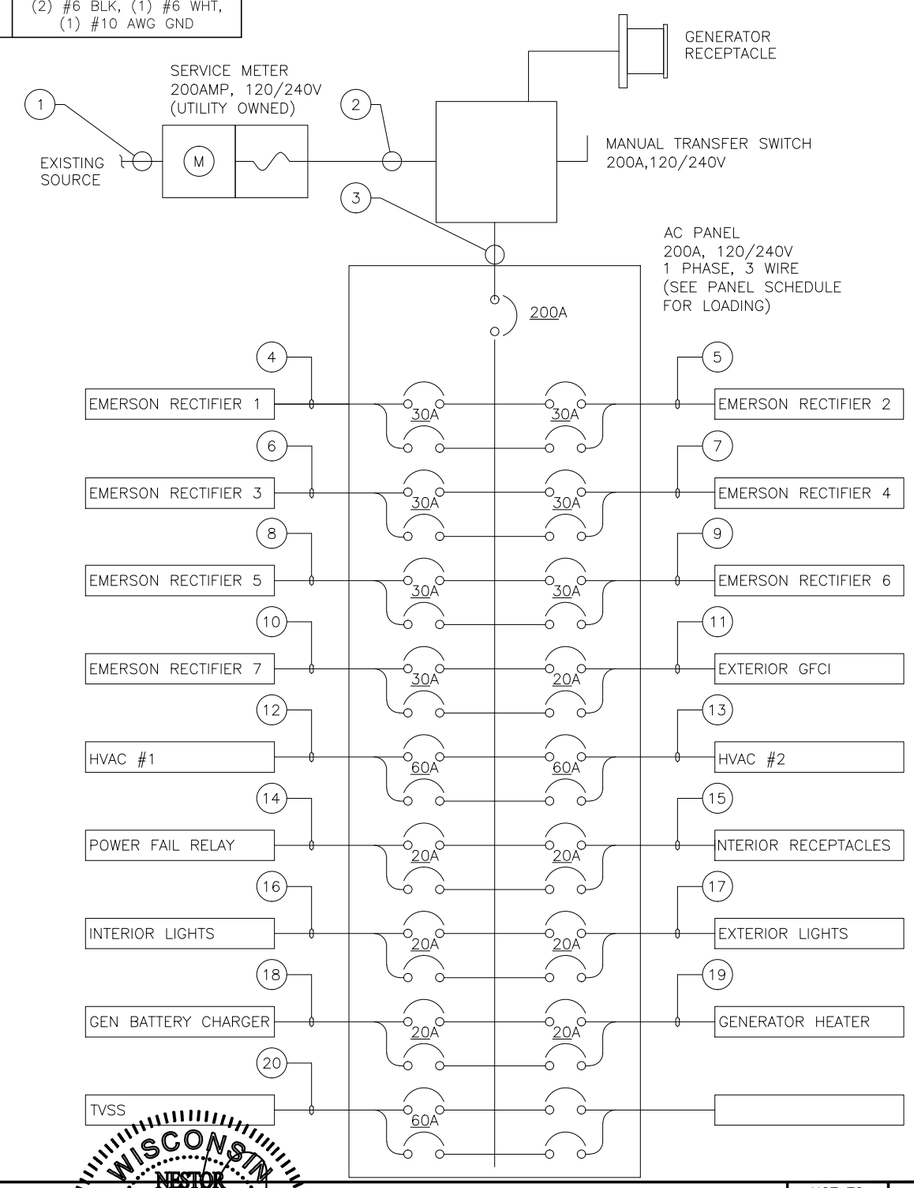

ELECTRIC SLD AND PANEL SCHEDULE

NOT TO SCALE | 1

at&t
930 NATIONAL PARKWAY
SCHAUMBURG, IL 60173

SAC WIRELESS
540 W. MADISON ST.
17TH FLOOR
CHICAGO, IL 60661
www.sacw.com
312.895.4977

A&E
SAC WIRELESS
540 W. MADISON ST.
17TH FLOOR
CHICAGO, IL 60661
www.sacw.com
312.895.4977

NSB– RAW LAND
12716346
MARTINSON
4614 COUNTY HWY A
OREGON, WI 53575

REVISIONS

REV.	DATE	DESCRIPTION	INITIALS
0	02/20/17	FOR CONSTRUCTION	GD
B	12/22/16	ISSUED FOR REVIEW	MI
A	12/08/16	ISSUED FOR REVIEW	MI

NOT FOR CONSTRUCTION UNLESS LABELED AS CONSTRUCTION SET

WISCONSIN NESTOR POPOWYCH A-3837 CHICAGO, IL ARCHITECT

DATE: 02/20/17

"I HEREBY CERTIFY THAT THESE PLANS WERE PREPARED BY ME OR UNDER MY DIRECT SUPERVISION AND THAT I AM A DULY REGISTERED ARCHITECT UNDER THE LAWS OF THE STATE OF WISCONSIN"

SHEET TITLE
ELECTRIC SLD AND PANEL SCHEDULE

SHEET NUMBER
E3

THE INFORMATION CONTAINED IN THIS SET OF CONSTRUCTION DOCUMENTS IS PROPRIETARY BY NATURE. ANY USE OR DISCLOSURE OTHER THAN THAT WHICH RELATES TO CARRIER SERVICES IS STRICTLY PROHIBITED.

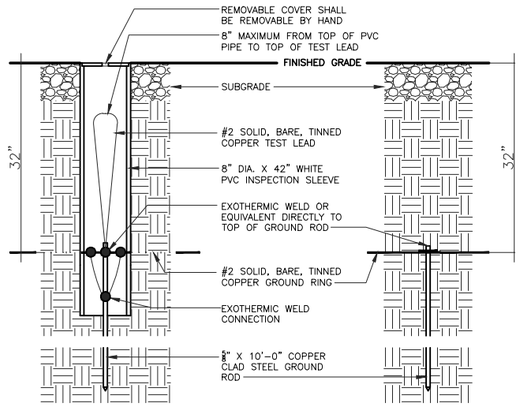

GROUND WELL, ROD, AND TEST WELL DETAIL | SCALE N.T.S. | 2

GROUNDING SYMBOL LEGEND:

1. INTERIOR GROUND SYSTEM BY EQUIPMENT SHELTER MANUFACTURER. GROUND CONNECTIONS INSIDE SHELTER ARE BY OTHERS.
2. 200 AMP MAIN SERVICE DISCONNECT BY EQUIPMENT SHELTER MANUFACTURER. GROUND ENCLOSURE TO GROUND RING. PROVIDE SERVICE GROUND PER NEC
3. #2 AWG SOLID BARE TINNED COPPER GROUND RING/WIRE BURIED MIN. 2'-6" BELOW GRADE OR AT FROST LINE WHICHEVER IS GREATER.
4. 5/8" DIAMETER X 10'-0" COPPER GROUND ROD INSTALLED EVERY 10'-0" AND CADWELDED TO GROUND RING. RE:DTL#2/E4
5. 5/8" DIAMETER X 10'-0" COPPER GROUND ROD WITH TEST WELL LOCATED AT ALL 4 CORNERS OF GROUND RING. RE:DTL#2/E4
6. TIE NEW SHELTER GROUND RING INTO TOWER GROUND RING IN TWO PLACES WITH #2 AWG SOLID BARE TINNED COPPER GROUND CONDUCTORS
7. #2 AWG SOLID BARE TINNED COPPER GROUND WIRE FROM AIR CONDITIONING UNITS TO GROUND RING. CONNECT TO A/C FRAME WITH (2) HOLE LUG.
8. #2 AWG SOLID BARE TINNED COPPER TOWER GROUND RING SET 24" OFF TOWER FOUNDATIONS – CIRCULAR AROUND MONOPOLE AND GUYED TOWER FOUNDATIONS AND TRIANGULAR AROUND SELF-SUPPORTED TOWER AROUND BASE (GUYED, MONOPOLE, SST, TVA, ETC.) GROUND RING.
9. #2 AWG THHN WIRE CADWELDED TO EACH ICE BRIDGE POST WITH MECH CONNECTION TO GRIP STRUT, JUMPER EACH SECTION WITH SAME. #2 AWG SOLID BARE TINNED COPPER GROUND CONDUCTOR FROM BOTTOM OF EACH SUPPORT POST TO THE BURIED RING RE:DTL#3/E6 (SIMILAR)
10. #2 AWG SOLID BARE TINNED COPPER GROUND WIRE FROM TELCO BOX (HOFFMAN AND JUNCTION) MOUNTED ON SHELTER WALL TO GROUND RING.
11. SHELTER EXTERIOR GROUND BAR WITH (2) TWO #2 AWG SOLID BARE TINNED COPPER GROUND WIRES CADWELDED TO EXTERIOR GROUND RING.
12. SHELTER INTERIOR MASTER GROUND BAR AND DOWNLEAD COILED INSIDE SHELTER IS THE ONLY INTERIOR GROUND BAR TO BE BONDED TO THE EXTERNAL GROUND RING.
13. #2 AWG SOLID BARE TINNED COPPER GROUND WIRE CADWELDED TO EQUIPMENT SHELTER ANCHOR TIE DOWN PLATES AND CADWELDED TO BURIED GROUND RING. REFER TO SHELTER FABRICATION DRAWINGS FOR LOCATIONS AND NUMBER OF CONNECTIONS.
14. EXISTING #2 AWG SOLID BARE TINNED COPPER GROUND WIRE COILED INSIDE SHELTER. ROUTE THROUGH PRECAST SHELTER WALL AND CADWELD TO BURIED GROUND RING. TYPICAL AT (6) SIX LOCATIONS.
15. GROUND BAR AT BASE OF TOWER WITH TWO (2) #2 AWG SOLID BARE TINNED COPPER GROUND DOWNLEAD WIRES ATTACHED TO TOWER GROUND RING AND ONE DOWNLEAD FROM GROUND BAR ABOVE ATTACHED TO GROUND BAR AT BASE OF TOWER.
16. #2 AWG SOLID BARE TINNED COPPER GROUND WIRE FROM GROUND RING TO NEW FENCE CORNER POST ALL CORNERS. RE:DTL#3/E6
17. ONE GROUND TEST WELL AND GROUND RODS SPACED AT MAX 10'-0" OC ALONG PATH OF TOWER GROUND RING
18. #2 AWG SOLID BARE TINNED COPPER GROUND WIRE CADWELDED TO GROUND RODS AND CADWELDED TO TOWER BASE PLATES, TWO FOR MONOPOLES AND GUYED TOWERS, ONE AT EACH SST LEG BASEPLATE – DO NOT CADWELD TO TOWER POLE OR LEG
19. 14 GAUGE BRAIDED TINNED COPPER STRAP CONDUCTOR BETWEEN GATES AND GATE POSTS. #2 AWG TINNED SOLID BARE COPPER CONDUCTOR CADWELDED TO GROUND RING WITH BURIED JUMPER BETWEEN GATE POSTS CADWELDED TO THE CONDUCTOR. RE:DTLS#2&#3/E6

SYMBOLS LEGEND:

- GROUND ROD
- GROUND ROD TEST WELL
- (NEW) GROUND WIRE
- GROUND BAR
- CADWELD CONNECTION
- MECHANICAL CONNECTION

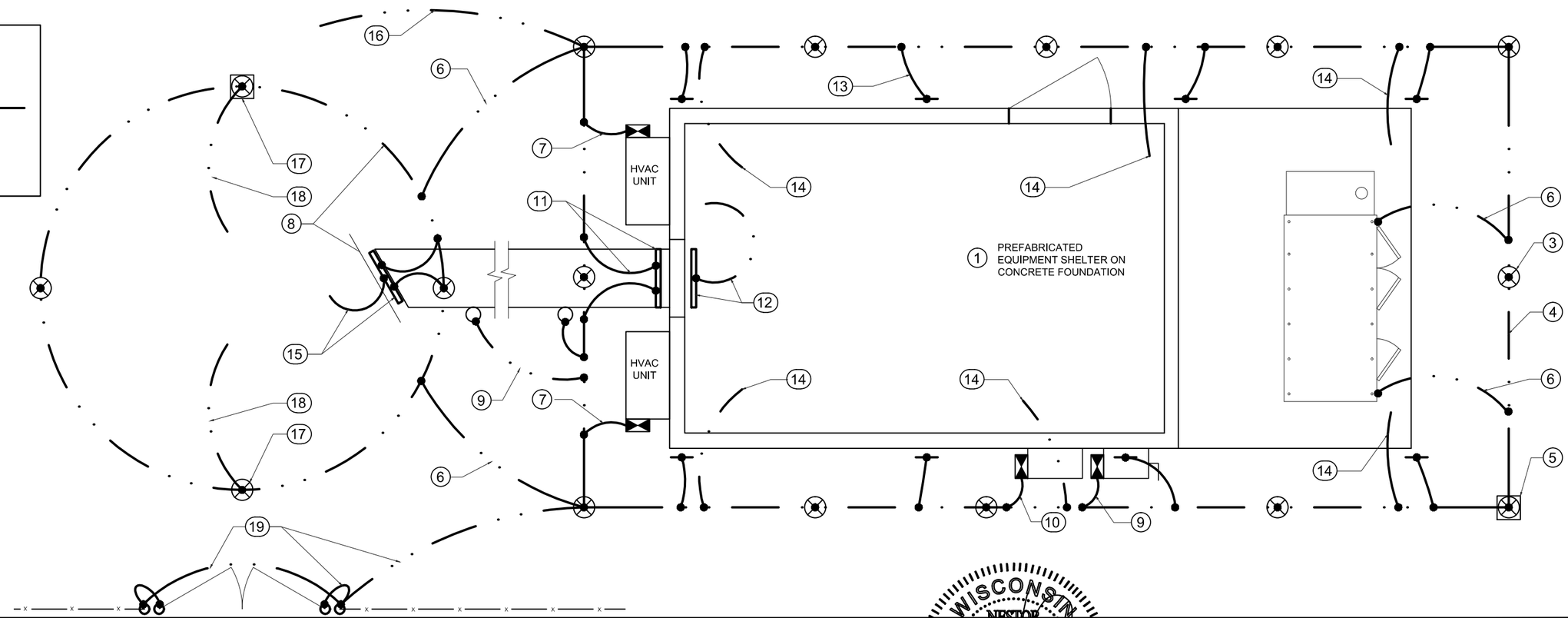

GENERIC TYPICAL GROUNDING PLAN | NOT TO SCALE | 1

THE INFORMATION CONTAINED IN THIS SET OF CONSTRUCTION DOCUMENTS IS PROPRIETARY BY NATURE. ANY USE OR DISCLOSURE OTHER THAN THAT WHICH RELATES TO CARRIER SERVICES IS STRICTLY PROHIBITED.

at&t
930 NATIONAL PARKWAY
SCHAUMBURG, IL 60173

SAC WIRELESS
540 W. MADISON ST.
17TH FLOOR
CHICAGO, IL 60661
www.sacw.com
312.895.4977

A&E
SAC WIRELESS
540 W. MADISON ST.
17TH FLOOR
CHICAGO, IL 60661
www.sacw.com
312.895.4977

NSB– RAW LAND
12716346
MARTINSON
4614 COUNTY HWY A
OREGON, WI 53575

REVISIONS

REV.	DATE	DESCRIPTION	INITIALS
0	02/20/17	FOR CONSTRUCTION	GD
B	12/22/16	ISSUED FOR REVIEW	MI
A	12/08/16	ISSUED FOR REVIEW	MI

NOT FOR CONSTRUCTION UNLESS LABELED AS CONSTRUCTION SET

WISCONSIN NESTOR POPOWYCH A-3837 CHICAGO, IL ARCHITECT

"I HEREBY CERTIFY THAT THESE PLANS WERE PREPARED BY ME OR UNDER MY DIRECT SUPERVISION AND THAT I AM A DULY REGISTERED ARCHITECT UNDER THE LAWS OF THE STATE OF WISCONSIN"

DATE: 02/20/17

SHEET TITLE
SHELTER GROUNDING PLAN & DETAILS

SHEET NUMBER
E4

THE INFORMATION CONTAINED IN THIS SET OF CONSTRUCTION DOCUMENTS IS PROPRIETARY BY NATURE. ANY USE OR DISCLOSURE OTHER THAN THAT WHICH RELATES TO CARRIER SERVICES IS STRICTLY PROHIBITED.

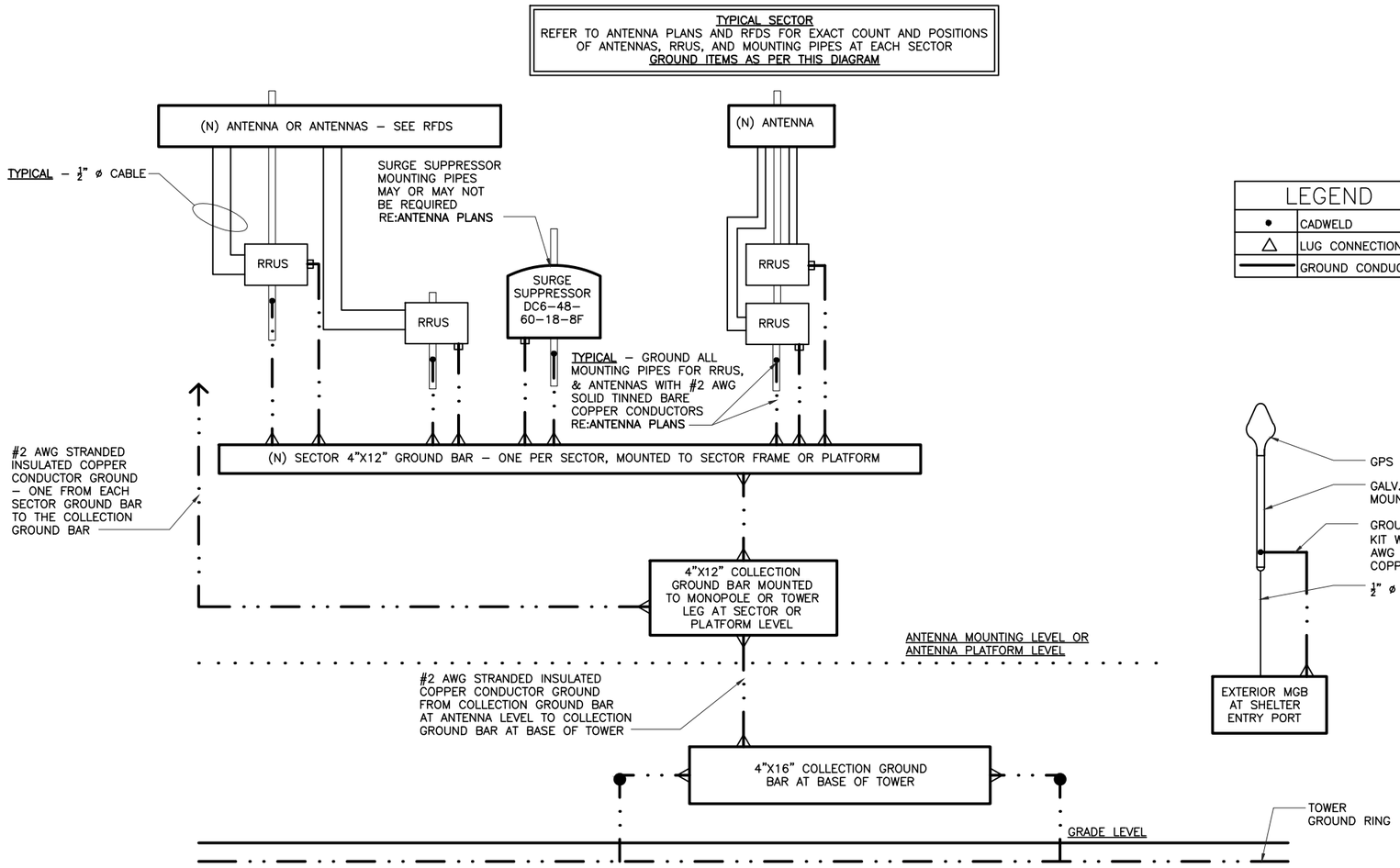

LEGEND	
•	CADWELD
△	LUG CONNECTION
———	GROUND CONDUCTOR

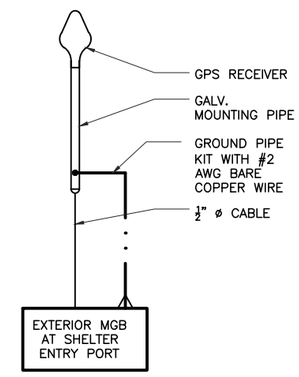

FENCE & GATE GROUNDING

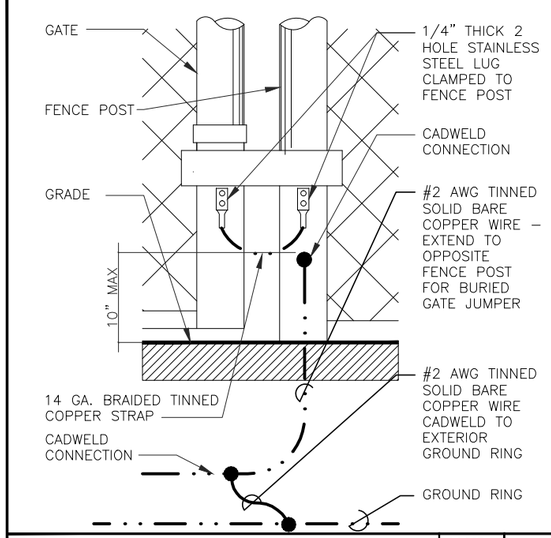

FENCE & GATE GROUNDING — SCALE N.T.S. — 2

FENCE GROUNDING

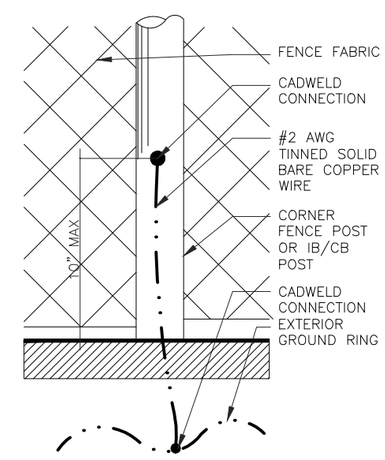

GENERIC ANTENNA GROUNDING SINGLE LINE DIAGRAM — SCALE N.T.S. — 1

FENCE GROUND — SCALE N.T.S. — 3

at&t
930 NATIONAL PARKWAY
SCHAUMBURG, IL 60173

SAC WIRELESS
540 W. MADISON ST.
17TH FLOOR
CHICAGO, IL 60661
www.sacw.com
312.895.4977

A&E
SAC WIRELESS
540 W. MADISON ST.
17TH FLOOR
CHICAGO, IL 60661
www.sacw.com
312.895.4977

NSB– RAW LAND
12716346
MARTINSON
4614 COUNTY HWY A
OREGON, WI 53575

REVISIONS

REV.	DATE	DESCRIPTION	INITIALS
0	02/20/17	FOR CONSTRUCTION	GD
B	12/22/16	ISSUED FOR REVIEW	MI
A	12/08/16	ISSUED FOR REVIEW	MI

NOT FOR CONSTRUCTION UNLESS LABELED AS CONSTRUCTION SET

WISCONSIN NESTOR POPOWYCH A-3837 CHICAGO, IL ARCHITECT

DATE: 02/20/17

"I HEREBY CERTIFY THAT THESE PLANS WERE PREPARED BY ME OR UNDER MY DIRECT SUPERVISION AND THAT I AM A DULY REGISTERED ARCHITECT UNDER THE LAWS OF THE STATE OF WISCONSIN"

SHEET TITLE
ANTENNA GROUNDING – SLD

SHEET NUMBER
E5

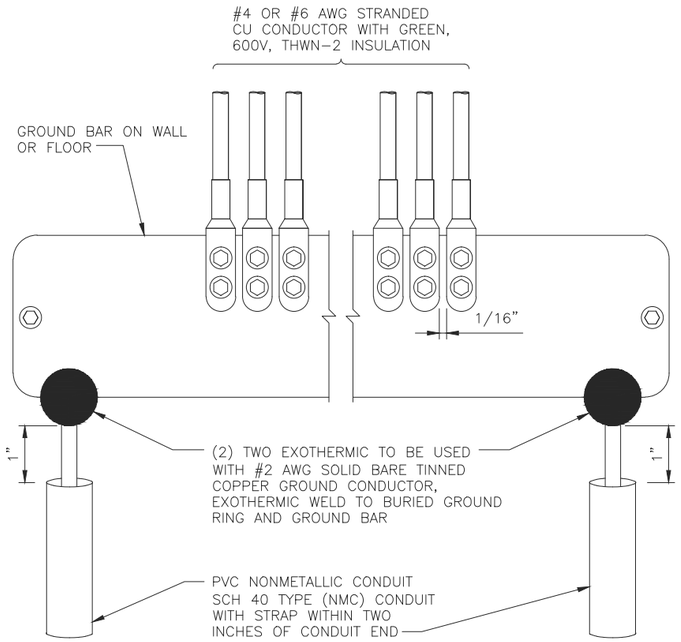

GROUND BAR DETAIL

SCALE N.T.S. | 4

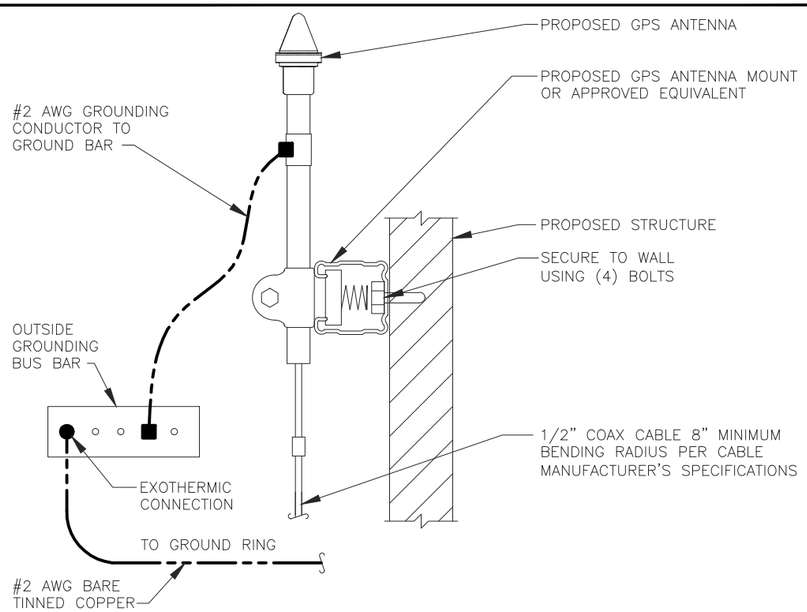

GPS ANTENNA GROUNDING

SCALE N.T.S. | 3

NEWTON INSTRUMENT COMPANY, INC. BUTNER, N.C.			
NO	REQUIRED	PART NUMBER	DESCRIPTION
1	1	1/4"x4"x30"	SOLID GROUND BAR
2	2	A-6056	WALL MOUNTING BRACKET
3	2	3061-4	INSULATORS
4	4	3012-1	5/8"-11x1" H.H.C.S.
5	4	3015-8	5/8" LOCKWASHER

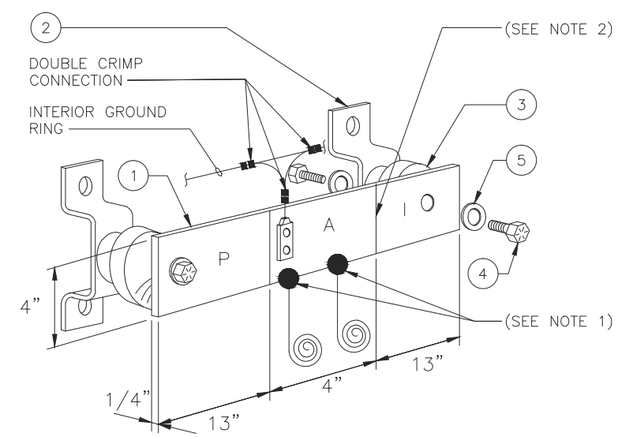

EACH GROUND CONDUCTOR TERMINATING ON ANY GROUND BAR SHALL HAVE AN IDENTIFICATION TAG ATTACHED AT EACH END THAT WILL IDENTIFY ITS ORIGIN AND DESTINATION

SECTION "P" – SURGE PROTECTORS

(EC) CELL REFERENCE GROUND BAR (IF COLLOCATED)
(EC) GENERATOR FRAMEWORK (IF AVAILABLE) (#2 AWG)
(EC) TELCO GROUND BAR (#2 AWG)
(EC) COMMERCIAL POWER COMMON NEUTRAL/GROUND BOND (3/0)
(EC) FIBER GROUND BAR (#2 AWG)
(EC) POWER ROOM REFERENCE GROUND BAR (#2 AWG)
(AT&T) RECTIFIER FRAMES

SECTION "A" – SURGE ABSORBERS

(EC) INTERIOR GROUND RING (#2 AWG)
(EC) EXTERNAL EARTH GROUND FIELD (BURIED GROUND RING) (#2 AWG)
(EC) METALLIC COLD WATER PIPE (IF AVAILABLE) (1/0 AWG)
(EC) BUILDING STEEL (IF AVAILABLE) (1/0 AWG)

SECTION "I" – ISOLATED GROUND ZONE

(AT&T) ALL ISOLATED GROUND REFERENCE
(AT&T) GROUND WINDOW BAR

DETAIL NOTES:

1. EXOTHERMICALLY WELD #2 AWG BARE TINNED SOLID COPPER CONDUCTOR TO GROUND BAR. ROUTE CONDUCTOR TO BURIED GROUND RING AND PROVIDE PARALLEL EXOTHERMIC WELD.
2. THE INSTALLER SHALL USE PERMANENT MARKER TO DRAW THE LIKE BETWEEN SECTION AND LABEL EACH SECTION ("P", "A", "I" WITH 1" HIGH LETTERS

MASTER GROUND BAR DETAIL

SCALE N.T.S. | 2

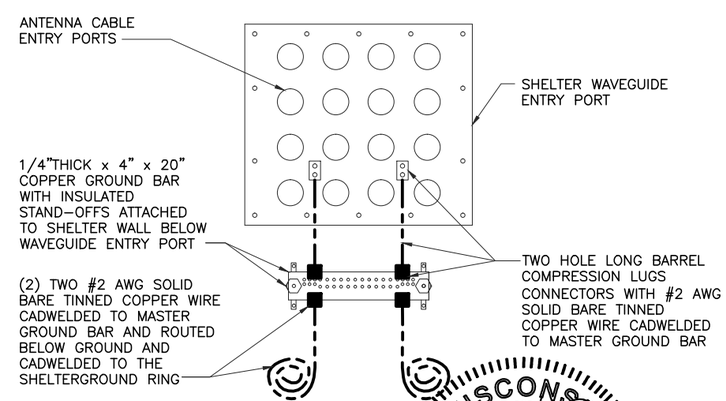

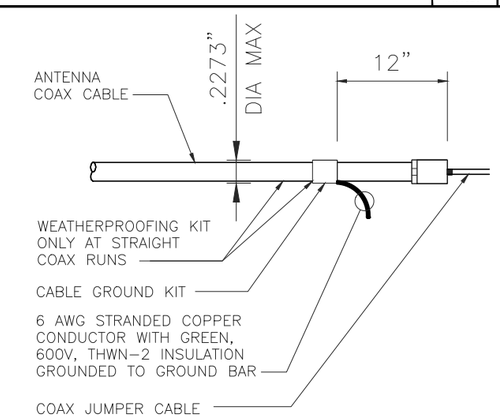

COAX GROUND KIT DETAIL

SCALE N.T.S. | 1

WISCONSIN NESTOR POPOWYCH A-3837 CHICAGO, IL ARCHITECT

"I HEREBY CERTIFY THAT THESE PLANS WERE PREPARED BY ME OR UNDER MY DIRECT SUPERVISION AND THAT I AM A DULY REGISTERED ARCHITECT UNDER THE LAWS OF THE STATE OF WISCONSIN"

DATE: 02/20/17

at&t
930 NATIONAL PARKWAY
SCHAUMBURG, IL 60173

SAC WIRELESS
540 W. MADISON ST.
17TH FLOOR
CHICAGO, IL 60661
www.sacw.com
312.895.4977

A&E
SAC WIRELESS
540 W. MADISON ST.
17TH FLOOR
CHICAGO, IL 60661
www.sacw.com
312.895.4977

NSB- RAW LAND
12716346
MARTINSON
4614 COUNTY HWY A
OREGON, WI 53575

REVISIONS

REV.	DATE	DESCRIPTION	INITIALS
0	02/20/17	FOR CONSTRUCTION	GD
B	12/22/16	ISSUED FOR REVIEW	MI
A	12/08/16	ISSUED FOR REVIEW	MI

NOT FOR CONSTRUCTION UNLESS LABELED AS CONSTRUCTION SET

SHEET TITLE: GROUNDING DETAILS

SHEET NUMBER: E6

THE INFORMATION CONTAINED IN THIS SET OF CONSTRUCTION DOCUMENTS IS PROPRIETARY BY NATURE. ANY USE OR DISCLOSURE OTHER THAN THAT WHICH RELATES TO CARRIER SERVICES IS STRICTLY PROHIBITED.

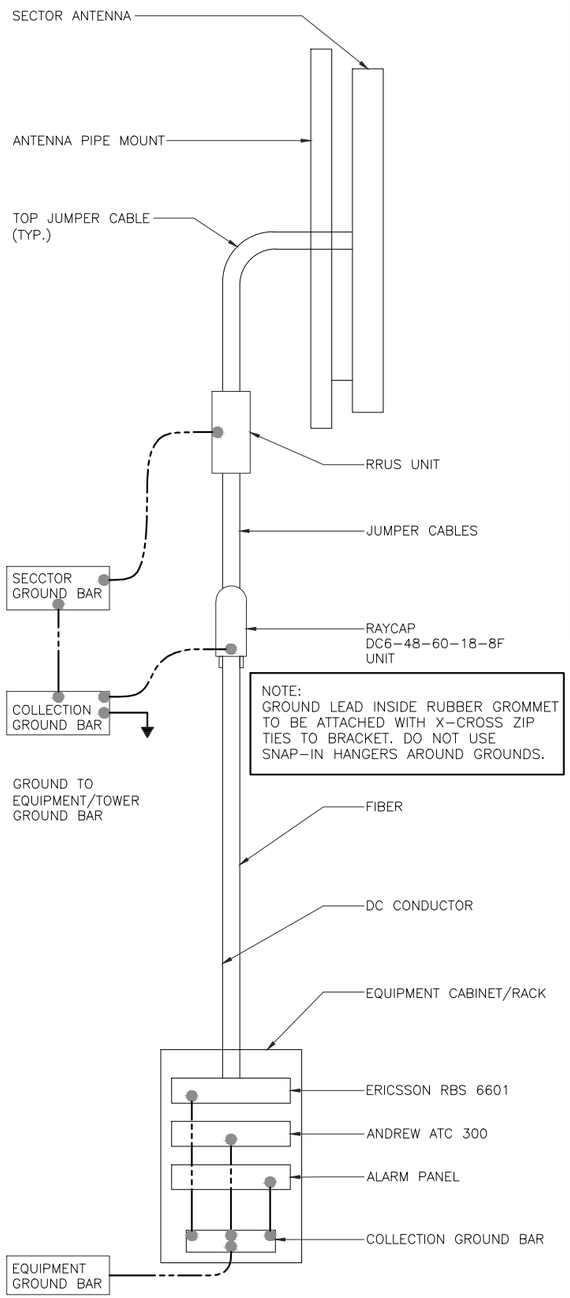

NOTE:
GROUND LEAD INSIDE RUBBER GROMMET TO BE ATTACHED WITH X-CROSS ZIP TIES TO BRACKET. DO NOT USE SNAP-IN HANGERS AROUND GROUNDS.

CABLE GROUNDING | NO SCALE | 4

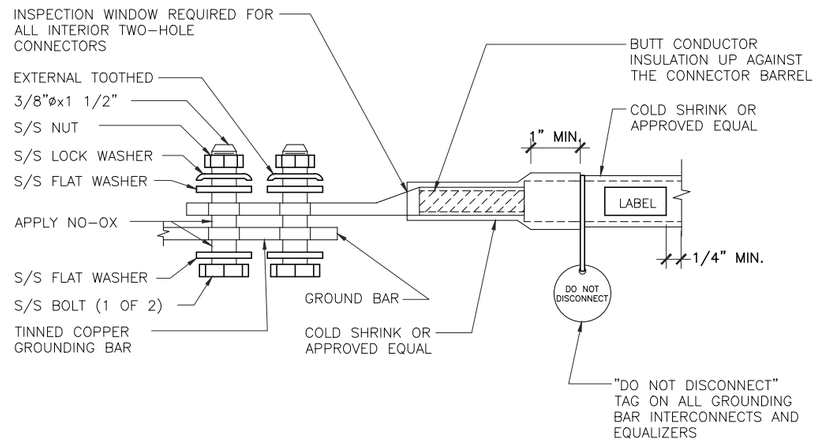

EXTERIOR TWO HOLE LUG DETAIL | NO SCALE | 3

NOT USED | NO SCALE | 2

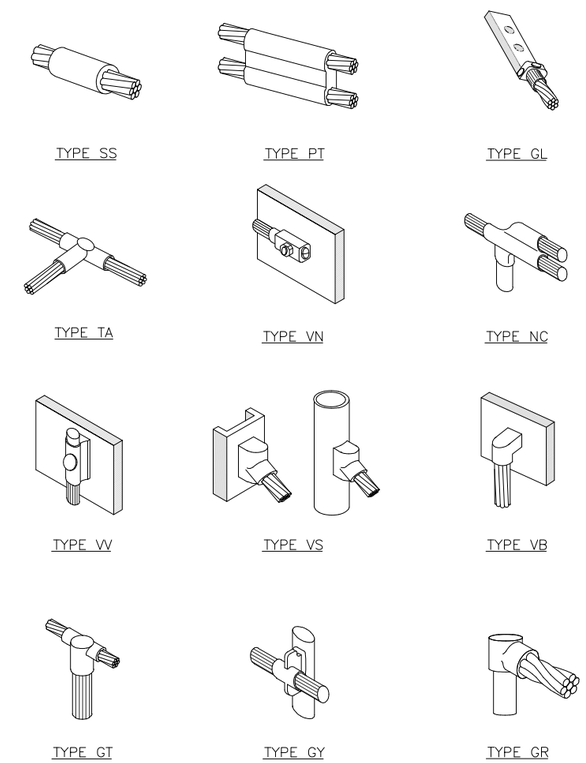

CADWELD DETAILS | NO SCALE | 1

THE INFORMATION CONTAINED IN THIS SET OF CONSTRUCTION DOCUMENTS IS PROPRIETARY BY NATURE. ANY USE OR DISCLOSURE OTHER THAN THAT WHICH RELATES TO CARRIER SERVICES IS STRICTLY PROHIBITED.

at&t
930 NATIONAL PARKWAY
SCHAUMBURG, IL 60173

SAC WIRELESS
540 W. MADISON ST.
17TH FLOOR
CHICAGO, IL 60661
www.sacw.com
312.895.4977

A&E
SAC WIRELESS
540 W. MADISON ST.
17TH FLOOR
CHICAGO, IL 60661
www.sacw.com
312.895.4977

NSB- RAW LAND
12716346
MARTINSON
4614 COUNTY HWY A
OREGON, WI 53575

REVISIONS

REV.	DATE	DESCRIPTION	INITIALS
0	02/20/17	FOR CONSTRUCTION	GD
B	12/22/16	ISSUED FOR REVIEW	MI
A	12/08/16	ISSUED FOR REVIEW	MI

NOT FOR CONSTRUCTION UNLESS LABELED AS CONSTRUCTION SET

WISCONSIN NESTOR POPOWYCH A-3837 CHICAGO, IL ARCHITECT

DATE: 02/20/17

"I HEREBY CERTIFY THAT THESE PLANS WERE PREPARED BY ME OR UNDER MY DIRECT SUPERVISION AND THAT I AM A DULY REGISTERED ARCHITECT UNDER THE LAWS OF THE STATE OF WISCONSIN"

SHEET TITLE
GROUNDING DETAILS

SHEET NUMBER
E7

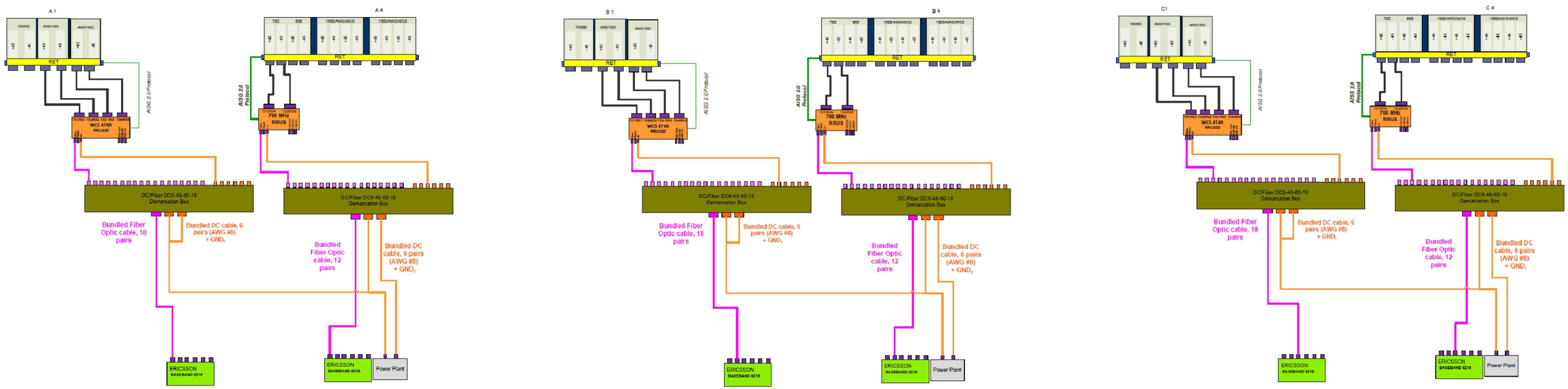

RF

1

THE INFORMATION CONTAINED IN THIS SET OF CONSTRUCTION DOCUMENTS IS PROPRIETARY BY NATURE. ANY USE OR DISCLOSURE OTHER THAN THAT WHICH RELATES TO CARRIER SERVICES IS STRICTLY PROHIBITED.

at&t
930 NATIONAL PARKWAY
SCHAUMBURG, IL 60173

SAC WIRELESS
540 W. MADISON ST.
17TH FLOOR
CHICAGO, IL 60661
www.sacw.com
312.895.4977

A&E
SAC WIRELESS
540 W. MADISON ST.
17TH FLOOR
CHICAGO, IL 60661
www.sacw.com
312.895.4977

NSB– RAW LAND
12716346
MARTINSON
4614 COUNTY HWY A
OREGON, WI 53575

REVISIONS

REV.	DATE	DESCRIPTION	INITIALS
0	02/20/17	FOR CONSTRUCTION	GD
B	12/22/16	ISSUED FOR REVIEW	MI
A	12/08/16	ISSUED FOR REVIEW	MI

NOT FOR CONSTRUCTION UNLESS LABELED AS CONSTRUCTION SET

WISCONSIN
NESTOR POPOWYCH
A-3837
CHICAGO, IL
ARCHITECT

"I HEREBY CERTIFY THAT THESE PLANS WERE PREPARED BY ME OR UNDER MY DIRECT SUPERVISION AND THAT I AM A DULY REGISTERED ARCHITECT UNDER THE LAWS OF THE STATE OF WISCONSIN"

DATE: 02/20/17

SHEET TITLE
RFDS PLUMBING DIAGRAM

SHEET NUMBER
RF

THE INFORMATION CONTAINED IN THIS SET OF CONSTRUCTION DOCUMENTS IS PROPRIETARY BY NATURE. ANY USE OR DISCLOSURE OTHER THAN THAT WHICH RELATES TO CARRIER SERVICES IS STRICTLY PROHIBITED.

NOTICE

Beyond This Point you are entering a controlled area where RF emissions *may exceed* the FCC General Population Exposure Limits.

Follow all posted signs and site guidelines for working in a RF environment.

at&t

Ref: 47CFR 1.1307(b)

CAUTION

Beyond This Point you are entering a controlled area where RF emissions *may exceed* the FCC Occupational Exposure Limits.

Obey all posted signs and site guidelines for working in a RF environment.

at&t

Ref: 47CFR 1.1307(b)

ALERTING SIGNS

ALERTING SIGN
(FOR CELL SITE BATTERIES)

ALERTING SIGN
(FOR DIESEL FUEL)

ALERTING SIGN
(FOR PROPANE)

WARNING!

DANGER DO NOT TOUCH TOWER!

SERIOUS "RF" BURN HAZARD!

MAINTAIN AN ADEQUATE CLEARANCE BETWEEN TOWER SUPPORTS AND GUY WIRES

FAILURE TO OBEY ALL POSTED SIGNS AND SITE GUIDELINES FOR WORKING IN A RADIO FREQUENCY ENVIRONMENT COULD RESULT IN SERIOUS INJURY. CONTACT CURRENT MAY EXCEED LIMITS PRESCRIBED IN ANSI/EEE C95.1-1992 FOR CONTROLLED ENVIRONMENTS.

at&t

ALERTING SIGN

PROPERTY OF AT&T

at&t

AUTHORIZED
PERSONNEL ONLY

IN CASE OF EMERGENCY, OR PRIOR TO PERFORMING MAINTENANCE ON THIS SITE, CALL 800-638-2822 AND REFERENCE CELL SITE NUMBER_____

INFO SIGN #4

INFORMATION

AT&T operates telecommunications antennas at this location. Remain at least 3 feet away from any antenna and obey all posted signs.

Contact the owner(s) of the antenna(s) before working closer than 3 feet from the antenna.

Contact AT&T at _____ prior to performing any maintenance or repairs near AT&T antennas. This is Site#_____

Contact the management office if this door/hatch/gate is found unlocked.

INFORMACION

En esta propiedad se ubican antenas de telecomunicaciones operadas por AT&T. Favor mantener una distancia de no menos de 3 pies y obedecer todos los avisos.

Comuniquese con el propictario o los propicatarios de las antenas antes de trabajar o caminar a una distancia de menos de 3 pies de la antena.

Comuniquese con AT&T _____ antes de realizar cualquier mantenimiento o reparaciones cerca de la antenas de AT&T.

Esta es la estacion base numero_____

Favor comunicarse con la oficina de la administracion del edificio si esta puerta o compuerta se encuentra sin candado.

at&t

INFO SIGN #1

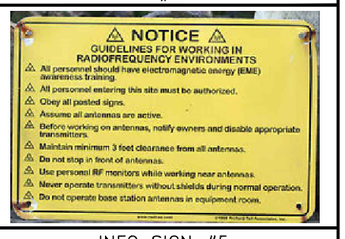

INFO SIGN #5

INFORMATION

ACTIVE ANTENNAS ARE MOUNTED

☐ ON THE OUTSIDE OF THIS BUILDING

☐ BEHIND THIS PANEL

☐ ON THIS STRUCTURE

STAY BACK A MINIMUM
OF 3 FEET
FROM THESE ANTENNAS

Contact AT&T at _____ and follow their instructions prior to performing any maintenance or repairs closer than 3 feet from the antennas.

This is AT&T site# _____

at&t

INFO SIGN #2

STAY BACK 3 FEET FROM ANTENNA

at&t

INFO SIGN #3

GENERAL SIGNAGE GUIDELINES

Structure Type	INFO SIGN #1	INFO SIGN #2	INFO SIGN #3	INFO SIGN #4	Striping	NOTICE SIGN	CAUTION SIGN
Towers							
Monopole/Monopine/Monopalm	entrance gates, shelter doors **OR** on the outdoor cabinets	climbing side of the Tow er	On backside of Antennas	entrance gates, shelter doors **OR** on the outdoor cabinets			At the height of the first climbing step, min. 9ft above ground
SCE Tow ers/ Tow ers w ith high voltage	entrance gates, shelter doors **OR** on the outdoor cabinets	climbing side of the Tow er	On backside of Antennas	entrance gates, shelter doors **OR** on the outdoor cabinets			At the height of the first climbing step, min. 9ft above ground
Light Poles / Flag Poles	entrance gates, shelter doors **OR** on the outdoor cabinets	on the pole, no less than 3ft below the Antenna and no less than 9ft above ground	On backside of Antennas	entrance gates, shelter doors **OR** on the outdoor cabinets			
Utility Wood Poles (JPA)	entrance gates, shelter doors **OR** on the outdoor cabinets	on the pole, no less than 3ft below the Antenna and no less than 9ft above ground	On backside of Antennas	entrance gates, shelter doors **OR** on the outdoor cabinets		If GP max value of MPE at antenna level is: 0-99%: Notice sign; over 99%: Caution sign at no less than 3ft below antenna and 9ft above ground	
Microcells mounted on non-JPA poles	entrance gates, shelter doors **OR** on the outdoor cabinets	on the pole, no less than 3ft below the Antenna and no less than 9ft above ground	On backside of Antennas	entrance gates, shelter doors **OR** on the outdoor cabinets		Notice or Caution sign at no less than 9ft above ground: only if the exposure exceeds 90% of the General Public exposure at 6ft above ground or at outside surface of adjacent buildings	
Roof Tops							
At all access points to the roof	X			X			
On Antennas	X		X	X			
Concealed Antennas	X	X		X			
antennas mounted facing outside the building	X	X		X			
antennas on support structure	X	X		X			
Roofview Graph:							
Radiation area is w ithin 3ft from antenna	X	adjacent to each antenna		X		either Notice or Caution sign (based on Roofview results) at antennas/barrier	
Radiation area is beyond 3ft from antenna	X	adjacent to each antenna		X	diagonal, yellow striping as to Roofview graph		
Church Steeples	Access to steeple	adjacent to antennas if antennas are concealed	On backside of Antennas	Access to steeple			Caution sign at the antennas
Water Stations	Access to ladder	adjacent to antennas if antennas are concealed	On backside of Antennas	Access to ladder			Caution sign beside Info sign #1, min. 9ft above ground

Notes for Rooftop sites:

1. Either NOTICE or CAUTION signs need to be posted at each sector as close as possible to: the outer edge of the striped off area or the outer antennas of the sector.
2. If Roofview show s: only blue = Notice Sign, blue and yellow = Caution Sign, only yellow = Caution Sign to be installed.
3. Should the required striping area interfere w ith any structures or equipment (A/C, vents, roof hatch, doors, other antennas, dishes, etc.), please notify AT&T to modify the striping area, prior to starting the w ork

SIGNAGE GUIDELINES CHART

at&t
930 NATIONAL PARKWAY
SCHAUMBURG, IL 60173

SAC WIRELESS
540 W. MADISON ST.
17TH FLOOR
CHICAGO, IL 60661
www.sacw.com
312.895.4977

A&E
SAC WIRELESS
540 W. MADISON ST.
17TH FLOOR
CHICAGO, IL 60661
www.sacw.com
312.895.4977

NSB- RAW LAND
12716346
MARTINSON
4614 COUNTY HWY A
OREGON, WI 53575

REVISIONS

REV.	DATE	DESCRIPTION	INITIALS
0	02/20/17	FOR CONSTRUCTION	GD
B	12/22/16	ISSUED FOR REVIEW	MI
A	12/08/16	ISSUED FOR REVIEW	MI

NOT FOR CONSTRUCTION UNLESS LABELED AS CONSTRUCTION SET

NESTOR POPOWYCH
A-3837
CHICAGO, IL
ARCHITECT

"I HEREBY CERTIFY THAT THESE PLANS WERE PREPARED BY ME OR UNDER MY DIRECT SUPERVISION AND THAT I AM A DULY REGISTERED ARCHITECT UNDER THE LAWS OF THE STATE OF WISCONSIN"

DATE: 02/20/17

SHEET TITLE
SIGNAGE REQUIREMENTS

SHEET NUMBER
SIGNAGE

WIRELESS SITE MAP

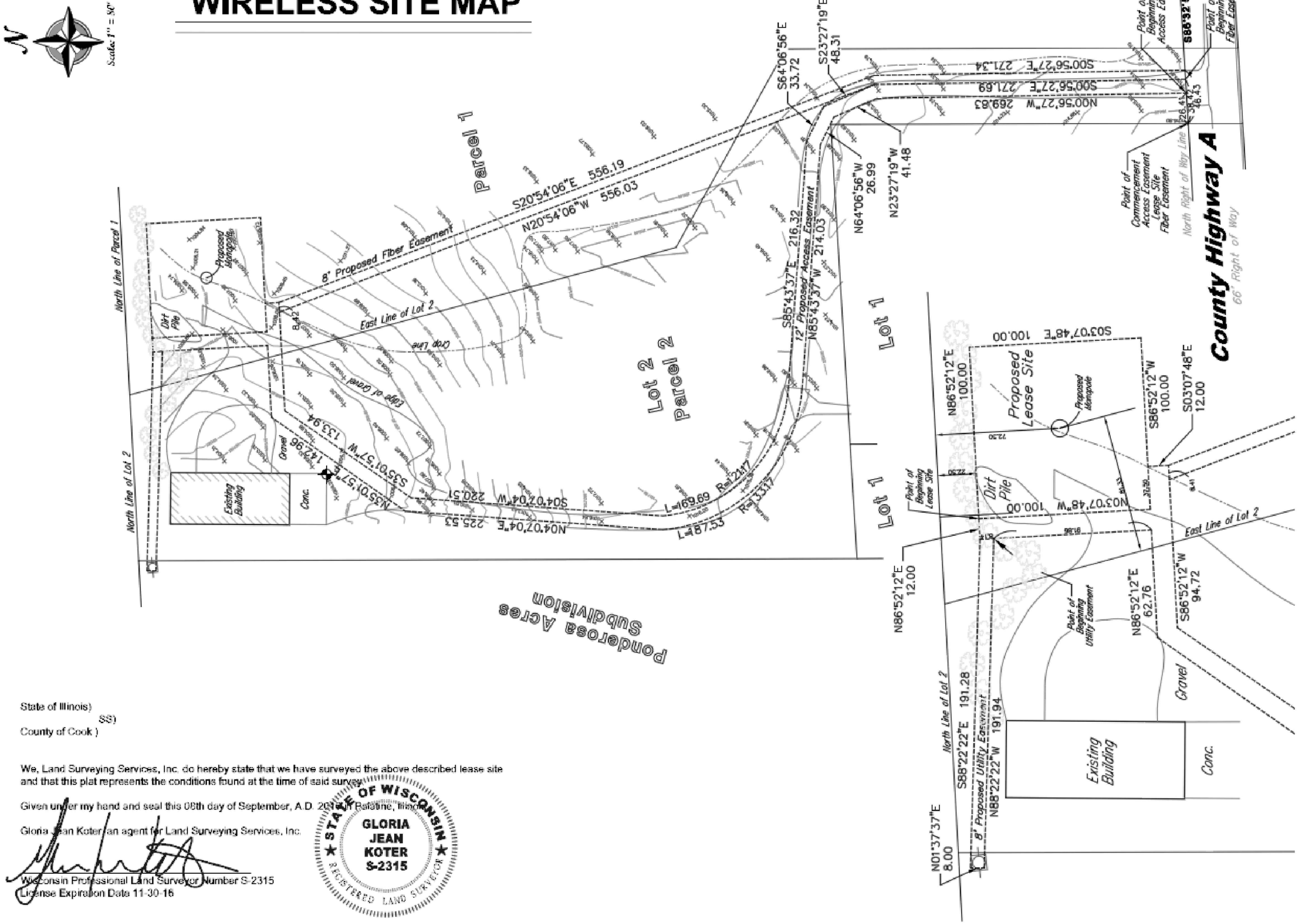

State of Illinois)
SS)
County of Cook)

We, Land Surveying Services, Inc. do hereby state that we have surveyed the above described lease site and that this plat represents the conditions found at the time of said survey.

Given under my hand and seal this 08th day of September, A.D. 2016 at Palatine, Illinois.

Gloria Jean Koter, an agent for Land Surveying Services, Inc.

Wisconsin Professional Land Surveyor Number S-2315
License Expiration Date 11-30-16

STATE OF WISCONSIN
GLORIA JEAN KOTER
S-2315
REGISTERED LAND SURVEYOR

at&t
930 NATIONAL PARKWAY
SCHAUMBURG, IL 60173

SAC WIRELESS
540 W. MADISON ST.
16TH FLOOR
CHICAGO, IL 60661
www.sacw.com
312.895.4977

WESTCHESTER SERVICES LLC
604 FOX GLEN
BARRINGTON, IL 60010
TELEPHONE: 847-277-0070
FAX : 847-277-0080
AE@westchesterservices.com

Land Surveying Services, Inc.
574 W. Colfax Street
Palatine, Illinois 60067
Phone 847/991-7700
Fax 847/991-7707
Professional Design Firm
License No. 184-003623

REVISIONS

REV	DATE	DESCRIPTION
0	09/08/16	PLAT OF SURVEY

12716346
RURAL OREGON
4614 COUNTY HIGHWAY A
OREGON, WI

SHEET TITLE
PLAT OF SURVEY

SHEET NUMBER
S1