JENNA DR [287996]
VERONA, WISCONSIN
135' MONOPOLE TOWER
[EXPANDABLE TO 165']

SITE LOCATION MAPS

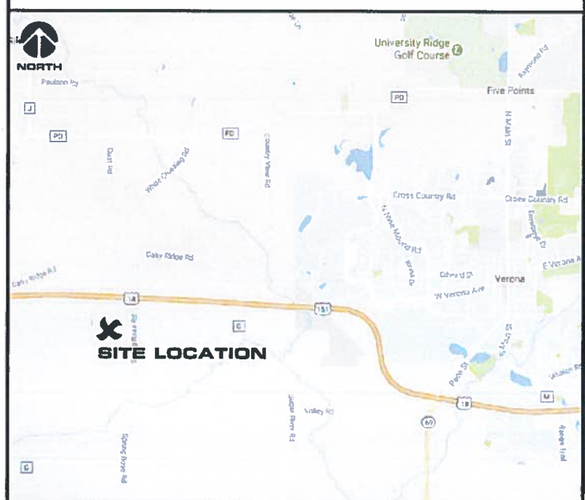

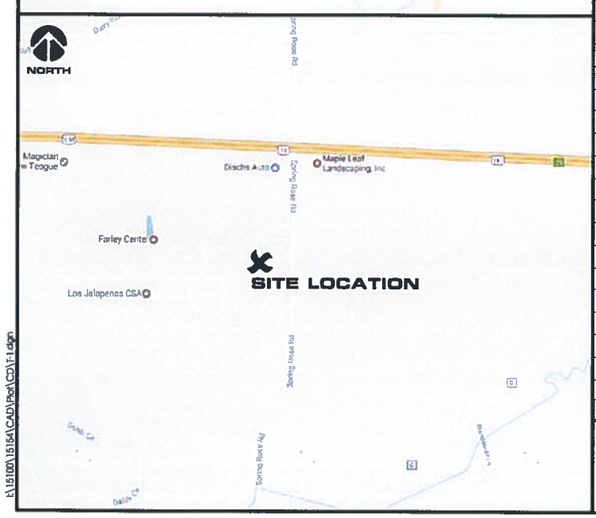

SHEET INDEX

NO:	SHEET TITLE
T-1	TITLE SHEET & PROJECT DATA
1-3	SURVEY *
C-1	SITE PLAN
C-2	COMPOUND PLAN
C-3	ENLARGED COMPOUND PLAN
C-4	FENCE DETAILS
C-5	CONSTRUCTION DETAILS
C-6	GRADING PLAN
C-7	SITE DETAILS
S-1	EQUIPMENT DETAILS
S-2	EQUIPMENT DETAILS
S-3	FOUNDATION DETAILS
S-4	SKID ELEVATIONS
A-1	TOWER ELEVATION
A-2	ANTENNA CONFIGURATION
A-3	ANTENNA CONFIGURATION
A-4	ICE BRIDGE DETAILS
A-5	ANTENNA/EQUIP. MOUNTING
E-1	UTILITY PLAN
E-2	METER AND TELCO RACK
E-3	UTILITY DETAILS
E-4	GENERATOR DETAILS
E-5	GENERATOR DETAILS
G-1	GROUNDING PLAN
G-2	GROUNDING DETAILS
G-3	GROUNDING DETAILS
SP-1	SPECIFICATIONS
SP-2	SPECIFICATIONS
P-1	SITE PHOTOS

* COMPLETED BY OTHERS

CONTRACTOR SHALL VERIFY ALL PLANS AND EXISTING DIMENSIONS/CONDITIONS ON SITE. IMMEDIATELY NOTIFY ENGINEER OF ANY DISCREPANCIES PRIOR TO PERFORMING ANY WORK OR BE RESPONSIBLE FOR THE SAME.

DIRECTORY

CLIENT:
VERIZON WIRELESS PERSONAL COMMUNICATIONS LP
d/b/a VERIZON WIRELESS
1515 E. WOODFIELD ROAD
10TH FLOOR
SCHAUMBURG, IL 60173
REAL ESTATE MANAGER: MELISSA DORKO
OFFICE: 847.619.4281
MOBILE: 847.421.7367

ENGINEERING COMPANY:
EDGE CONSULTING ENGINEERS, INC.
624 WATER STREET
PRAIRIE DU SAC, WI 53578
CONTACT: PAUL MOLITOR
PHONE: 608.644.1449

SITE ACQUISITION:
BUELL CONSULTING INC.
CONTACT: RON ZECHEL
PHONE: 414.588.6012

SURVEYOR:
MERIDIAN SURVEYING, LLC.
N 8774 FIRELANE 1
MENASHA, WI 54952
CONTACT: CRAIG KEACH
PHONE: 920.993.0881

PROJECT INFO

SITE LOCATION:
E-911 ADDRESS TO BE DETERMINED
2381 ZURBUCHEN DR.
VERONA, WI 53593

PROPERTY OWNER:
BETTY STIVARIUS
304 WELSH STREET
REWEY, WI 53580

TOWER OWNER:
CENTRAL STATES TOWERS III, LLC
323 S. HALE STREET, SUITE 100
WHEATON, IL 60187
CONTACT: YURI DOBROWOLSKY
PHONE: 847.226.5532
SITE NAME: JENNA DRIVE
SITE #: WI-00-1477

1A INFORMATION (NAD 1983/2011)
-PROPOSED TOWER BASE-
LAT: 42°-58'-58.05"
LONG: 89°-36'-15.26"
GROUND ELEVATION (NAVD 88): 1076.5'

PLSS INFORMATION:
BEING A PART OF SE1/4 OF THE NE1/4,
SECTION 24, T.6N, R.7E,
TOWN OF SPRINGDALE,
DANE COUNTY
WISCONSIN

TAX PARCEL NUMBER:
054/0607-241-9550-0

ZONED: A-1

SCOPE OF WORK

PROJECT DESCRIPTION:

PROJECT TYPE:	135' MONOPOLE TOWER (EXPANDABLE TO 165')
EQUIPMENT:	9'-4" x 16'-0" EQUIPMENT SKID
GENERATOR:	EXTERIOR DIESEL GENERATOR

RF DESCRIPTION (VERIFY WITH ECR):

PRO: ANTENNA C/L:	130' ABOVE T.O.C.
ANTENNAS:	(3) AWS/LTE ANTENNAS
	(3) LTE/PCS ANTENNAS
CABLES:	(3) PRO. HYBRID LINES
	(12) PRO. 1-5/8" COAX LINES
EQUIPMENT:	(3) PRO. SURGE PROTECTORS
	(6) PRO. REMOTE RADIO UNITS

NOTE:

FIBER COORDINATION IS NOT COMPLETE (PENDING FIBER CONTACT). PRIOR TO CONSTRUCTION, CONTACT DESIGNER FOR UPDATE.

UTILITY INFO

ELECTRIC PROVIDER:	NAME:	ALLIANT ENERGY
	CONTACT:	JEFF NELSON
	PHONE:	608.845.1148
FIBER OPTIC PROVIDER:	NAME:	TBD
	CONTACT:	
	PHONE:	

TO OBTAIN LOCATION OF PARTICIPANTS' UNDERGROUND FACILITIES BEFORE YOU DIG IN WISCONSIN, CALL DIGGER'S HOTLINE

TOLL FREE
1-800-242-8511
FAX A LOCATE 1-800-338-3860

WI STATUTE 182.0175 (1974) REQUIRES MIN. OF 3 WORK DAYS NOTICE BEFORE YOU EXCAVATE

ENGINEER SEAL:

WISCONSIN
KENNETH C. BAUMGARDT
33001
PRAIRIE DU SAC, WI
PROFESSIONAL ENGINEER

I HEREBY CERTIFY THAT THIS PLAN SET WAS PREPARED BY ME OR UNDER MY DIRECT SUPERVISION OTHER THAN THE EXCEPTIONS NOTED IN THE SHEET INDEX, AND THAT I AM A DULY LICENSED PROFESSIONAL ENGINEER UNDER THE LAWS OF THE STATE OF WISCONSIN.

Signature:

Date: 7/17/17

Edge Consulting Engineers, Inc.
624 Water Street
Prairie du Sac, WI 53578
608.644.1449 voice
608.644.1549 fax
www.edgeconsult.com

SHEET TITLE:
TITLE SHEET
JENNA DR [287996]
VERONA, WISCONSIN

PRELIMINARY DWGS:	INT:
CD 90's V.1 - 03/31/2017	CV
STAMPED PERMIT DWGS:	
STAMPED FINAL DWGS:	
FINAL CDs V.1 - 07/12/2017	NAT

CHECKED BY: PCM
PLOT DATE: 7/12/2017
PROJECT #: 15154
FILE NAME: T-1.dgn

SHEET NUMBER:
T-1

© EDGE CONSULTING ENGINEERS, INC.

L:\15100\15154\CAD\Part\C01-1.dgn

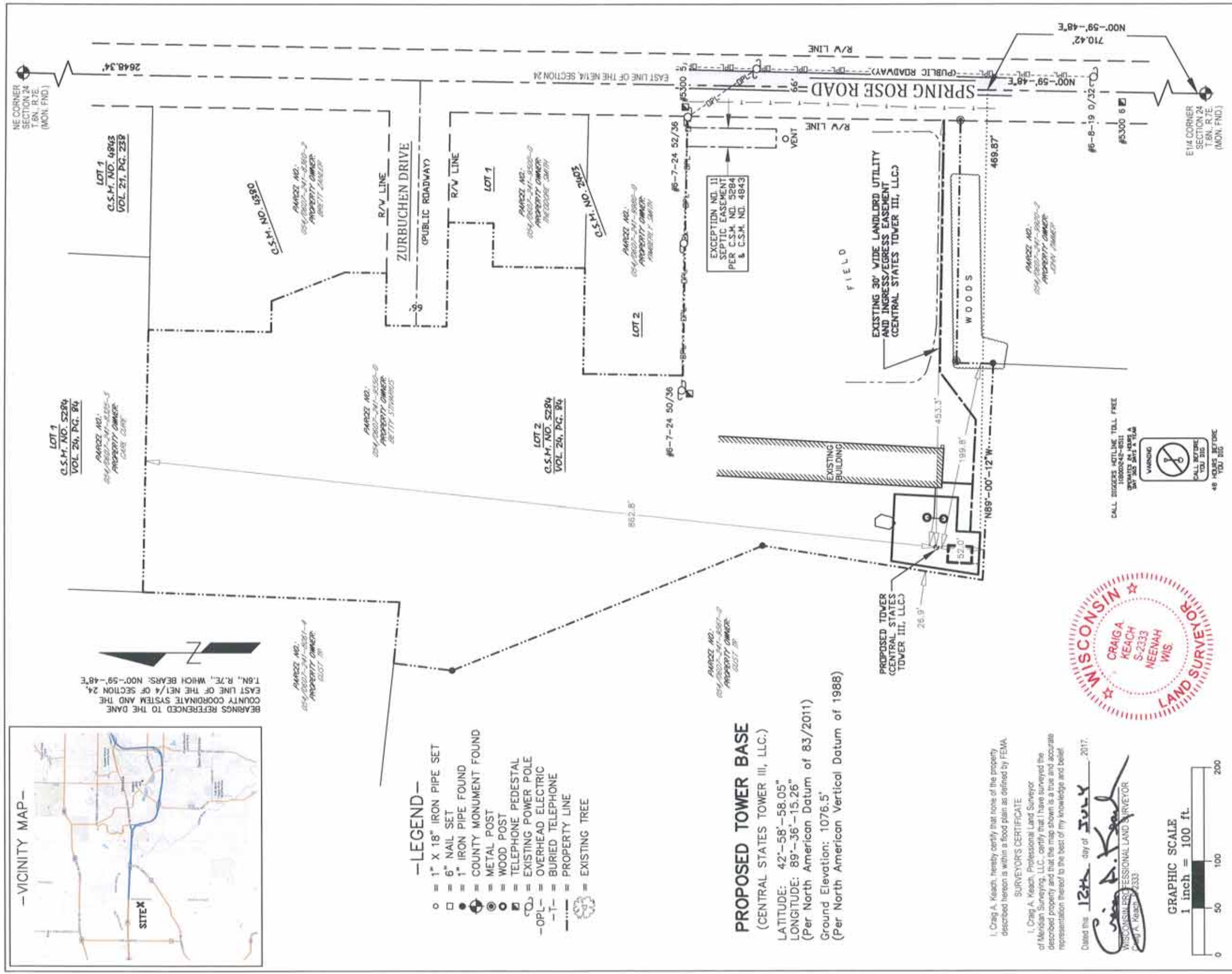

SURVEYED FOR:

Edge
Consulting Engineers, Inc.
624 Water Street
Prairie du Sac, WI 53578
608.644.1449 voice
608.644.1549 fax
www.edgeconsult.com

SURVEYED FOR:

verizon
1515 WOODFIELD ROAD
SUITE 1400
SCHAUMBURG, IL 60173

MERIDIAN SURVEYING, LLC
N8774 Firelane 1
Menasha, WI 54952
Office: 920-993-0881
Fax: 920-273-6037

SITE NAME:	JENNA DRIVE
SITE NUMBER:	287996
SITE ADDRESS:	2381 ZURBUCHEN DRIVE VERONA, WI 53593

PROPERTY OWNER:
BETTY STIVARIUS
304 WELSH STREET
REWEY, WI 53580

PARCEL NO.: 054/0607-241-9550-0

ZONED: A-1

DEED: DOCUMENT NO. 5044751

LEASE EXHIBIT

FOR
VERIZON WIRELESS PERSONAL COMMUNICATIONS LP d/b/a VERIZON WIRELESS

BEING A PART OF SE1/4 OF THE NE1/4 OF SECTION 24, T.6N., R.7E., TOWN OF SPRINGDALE, DANE COUNTY, WISCONSIN

NO.	DATE	DESCRIPTION	BY
3	5/15/17	Added Text	JB
2	3/29/17	Revised Lease Area	JD
1	2/28/17	Preliminary Survey	JD

DRAWN BY: J.D.	FIELD WORK DATE: 2/7/17
CHECKED BY: C.A.K.	FIELD BOOK: M-40, PG.52
JOB NO.: 9042	SHEET 1 OF 3

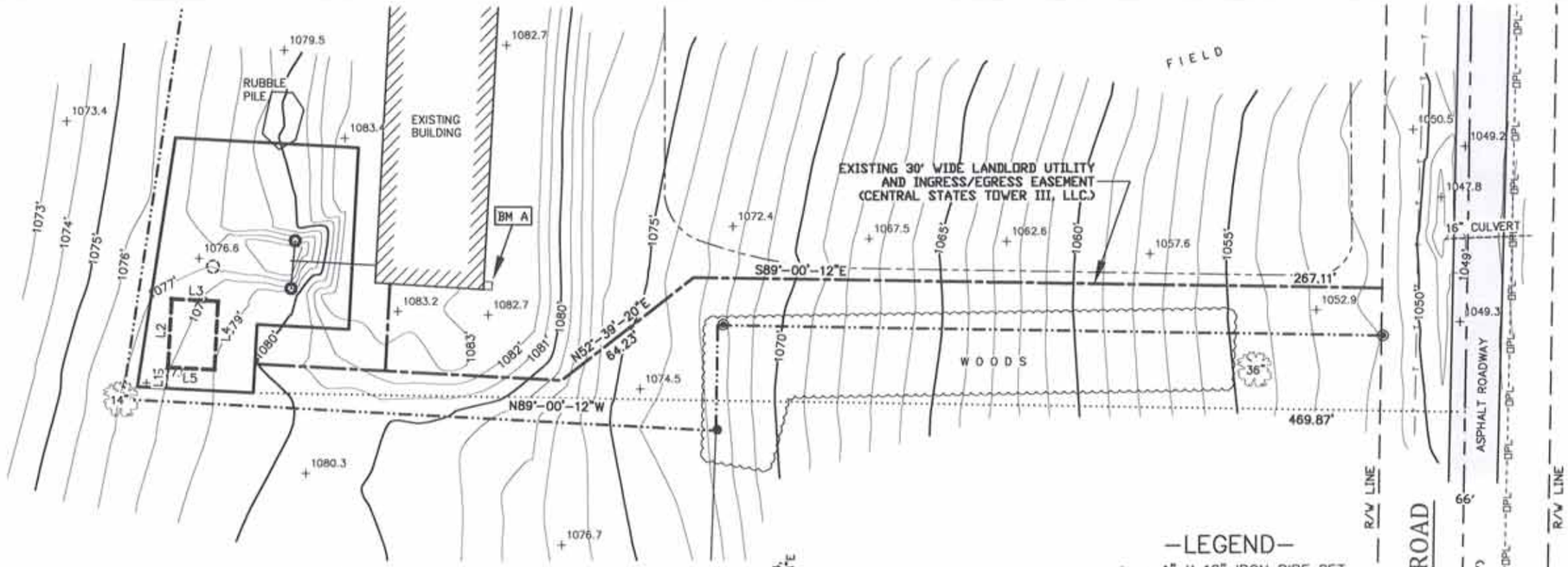

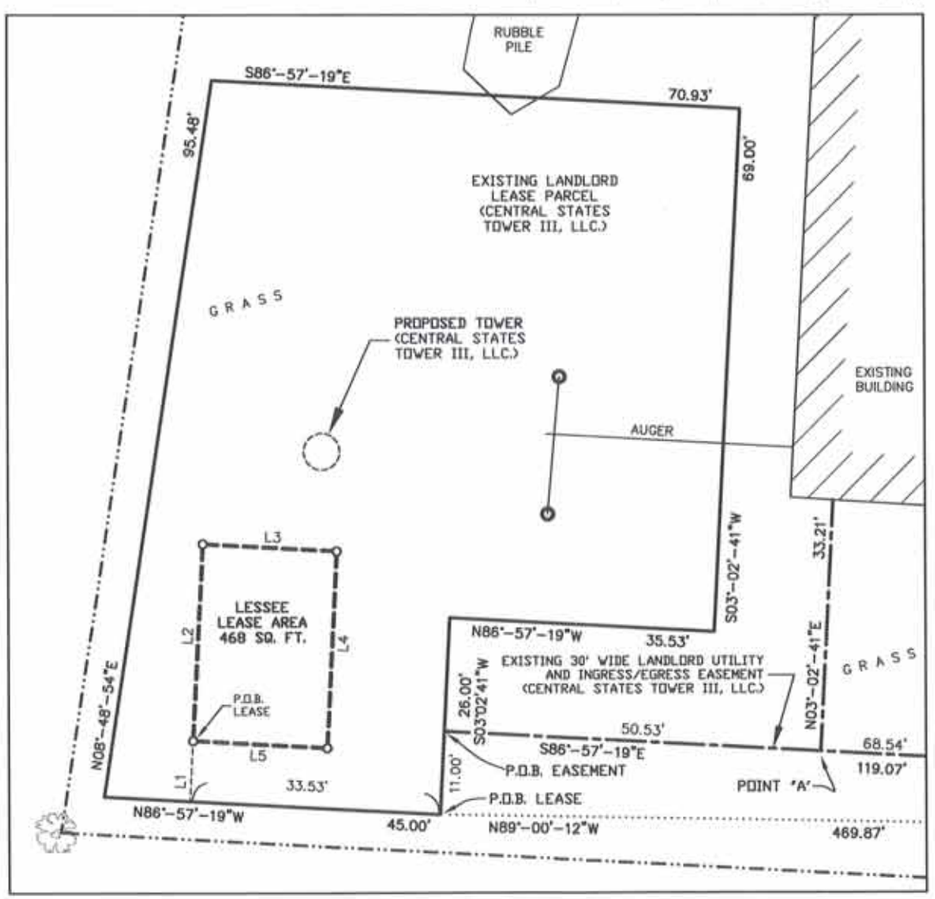

BEARINGS REFERENCED TO THE DANE COUNTY COORDINATE SYSTEM AND THE EAST LINE OF THE NE1/4 OF SECTION 24, T.6N., R.7E., WHICH BEARS: N00°-59'-48"E

LINE TABLE		
Line #	Direction	Length
L1	N03°02'41"E	8.00'
L2	N03°02'41"E	26.00'
L3	S86°57'19"E	18.00'
L4	S03°02'41"W	26.00'
L5	N86°57'19"W	18.00'

—LEGEND—

- ○ = 1" X 18" IRON PIPE SET
- □ = 6" NAIL SET
- ● = 1" IRON PIPE FOUND
- = COUNTY MONUMENT FOUND
- = METAL POST
- = WOOD POST
- = TELEPHONE PEDESTAL
- = EXISTING POWER POLE
- —OPL— = OVERHEAD ELECTRIC
- —T— = BURIED TELEPHONE
- = PROPERTY LINE
- = EXISTING TREE

SURVEY NOTES:

-THE LOCATION OF THE EXISTING UTILITIES, AS SHOWN ON THIS PLAN, ARE APPROXIMATE ONLY. IT SHALL BE THE RESPONSIBILITY OF THE CONTRACTOR TO VERIFY ACTUAL LOCATION AND DEPTH OF ALL EXISTING UTILITIES. THE OWNER AND THE SURVEYOR SHALL NOT BE RESPONSIBLE FOR ANY OMISSION OR VARIATION FROM THE LOCATION SHOWN.

-DIGGERS HOTLINE TICKET NO. 20170500084 AND NO. 20170500099.

-PRIVATE UTILITIES MARKED ON 2-3-2017.

-NO TITLE SEARCH FOR PARCEL OWNERSHIP OR EXISTENCE OR NONEXISTENCE OF RECORDED OR UNRECORDED EASEMENTS HAS BEEN COMPLETED AS PART OF THIS SURVEY.

-THIS IS NOT A BOUNDARY SURVEY OF THE PARENT PARCEL. THIS SURVEY REPRESENTS THE LEASE AREA AND EASEMENTS ONLY.

FEMA NOTE:
-ACCORDING TO FEDERAL EMERGENCY AGENCY MAPS, THE PROPOSED TELECOMMUNICATIONS SITE IS LOCATED IN ZONE "X", COMMUNITY PANEL NO. 55025C055G, DATED JANUARY 02 2009, AND IS NOT IN A SPECIAL FLOOD HAZARD AREA. ZONE "X" IS DESIGNATED AS: "AREAS DETERMINED TO BE OUTSIDE OF 500-YEAR FLOOD PLAIN".

WETLAND NOTE:
-THE PRESENCE AND LOCATION OF WETLANDS HAS NOT BEEN DETERMINED ON THIS PROPERTY. WETLANDS SHOULD ONLY BE DETERMINED BY ACTUAL FIELD DELINEATION PERFORMED BY A QUALIFIED WETLAND SPECIALIST.

GRAPHIC SCALE
1 inch = 20 ft.
0 10 20 40

BENCHMARK INFORMATION
SITE BENCHMARK: (BM A)
CHISELED "X" SET AT SE CORNER OF CONCRETE STOOP AT SE CORNER OF BLDG.
ELEVATION: 1083.45'

GRAPHIC SCALE
1 inch = 50 ft.
0 25 50 100

I, Craig A. Keach, hereby certify that none of the property described hereon is within a flood plain as defined by FEMA.

SURVEYOR'S CERTIFICATE

I, Craig A. Keach, Professional Land Surveyor of Meridian Surveying, LLC., certify that I have surveyed the described property and that the map shown is a true and accurate representation thereof to the best of my knowledge and belief.

Dated this 12th day of July, 2017.

Craig A. Keach
WISCONSIN PROFESSIONAL LAND SURVEYOR
Craig A. Keach, S-2333

WISCONSIN CRAIG A. KEACH S-2333 NEENAH WIS. LAND SURVEYOR

SURVEYED FOR:
Edge Consulting Engineers, Inc.
624 Water Street
Prairie du Sac, WI 53578
608.644.1449 voice
608.644.1549 fax
www.edgeconsult.com

SURVEYED FOR:
verizon
1515 WOODFIELD ROAD
SUITE 1400
SCHAUMBURG, IL 60173

MERIDIAN SURVEYING, LLC
N8774 Firelane 1
Menasha, WI 54952
Office: 920-993-0881
Fax: 920-273-6037

SITE NAME: JENNA DRIVE

SITE NUMBER: 287996

SITE ADDRESS: 2381 ZURBUCHEN DRIVE
VERONA, WI 53593

PROPERTY OWNER:
BETTY STIVARIUS
304 WELSH STREET
REWEY, WI 53580

PARCEL NO.: 054/0607-241-9550-0

ZONED: A-1

DEED: DOCUMENT NO. 5044751

LEASE EXHIBIT

FOR
VERIZON WIRELESS PERSONAL COMMUNICATIONS LP d/b/a VERIZON WIRELESS

BEING A PART OF SE1/4 OF THE NE1/4 OF SECTION 24, T.6N., R.7E., TOWN OF SPRINGDALE, DANE COUNTY, WISCONSIN

NO.	DATE	DESCRIPTION	BY
3	5/15/17	Added Text	JB
2	3/29/17	Revised Lease Area	JD
1	2/28/17	Preliminary Survey	JD

DRAWN BY: J.D.	FIELD WORK DATE: 2/7/17
CHECKED BY: C.A.K.	FIELD BOOK: M-40, PG.52
JOB NO.: 9042	SHEET 2 OF 3

LESSEE LEASE AREA

A part of Lot Two (2) of Certified Survey Map No. 5284 as recorded in Volume 24, on Page 84 as Document No. 2080592 of Dane County records, being located in the Southeast Quarter (SE1/4) of the Northeast Quarter (NE1/4) of Section Twenty-Four (24), Township Six (6) North, Range Seven (7) East, Town of Springdale, Dane County, Wisconsin containing 468 square feet (0.011 acres) of land and being described by:

Commencing at the East Quarter Corner of said Section 24; thence N00°-59'-48"E 710.42 feet along the east line of the NE1/4 of said Section 24; thence N89°-00'-12"W 469.87 feet; thence N86°-57'-19"W 33.53 feet; thence N03°-02'-41"E 8.00 feet to the point of beginning; thence continue N03°-02'-41"E 26.00 feet; thence S86°-57'-19"E 18.00 feet; thence S03°-02'-41"W 26.00 feet; thence N86°-57'-19"W 18.00 feet to the point of beginning, being subject to any and all easements and restrictions of record.

LEASE PARCEL (CENTRAL STATES TOWER III, LLC)

A part of Lot Two (2) of Certified Survey Map No. 5284 as recorded in Volume 24, on Page 84 as Document No. 2080592 of Dane County records, being located in the Southeast Quarter (SE1/4) of the Northeast Quarter (NE1/4) of Section Twenty-Four (24), Township Six (6) North, Range Seven (7) East, Town of Springdale, Dane County, Wisconsin containing 6,271 square feet (0.144 acres) of land and being described by:

Commencing at the East Quarter Corner of said Section 24; thence N00°-59'-48"E 710.42 feet along the east line of the NE1/4 of said Section 24; thence N89°-00'-12"W 469.87 feet to the point of beginning; thence N86°-57'-19"W 45.00 feet; thence N08°-48'-54"E 95.48 feet; thence S86°-57'-19"E 70.93 feet; thence S03°-02'-41"W 69.00 feet; thence N86°-57'-19"W 35.53 feet; thence S03°-02'-41"W 26.00 feet to the point of beginning, being subject to any and all easements and restrictions of record.

30' WIDE UTILITY & INGRESS/EGRESS EASEMENT (CENTRAL STATES TOWER III, LLC)

A part of Lot Two (2) of Certified Survey Map No. 5284 as recorded in Volume 24, on Page 84 as Document No. 2080592 of Dane County records, being located in the Southeast Quarter (SE1/4) of the Northeast Quarter (NE1/4) of Section Twenty-Four (24), Township Six (6) North, Range Seven (7) East, Town of Springdale, Dane County, Wisconsin containing 14,058 square feet (0.323 acres) of land and being Fifteen (15) feet each side of and parallel with the following described line:

Commencing at the East Quarter Corner of said Section 24; thence N00°-59'-48"E 710.42 feet along the east line of the NE1/4 of said Section 24; thence N89°-00'-12"W 469.87 feet; thence N03°-02'-41"E 11.00 feet to the point of beginning; thence S86°-57'-19"E 50.53 feet to a point herein after referred to as Point "A"; thence N03°-02'-41"E 33.21 feet to the point of termination. Also beginning at said Point "A"; thence S86°-57'-19"E 68.54 feet; thence N52°-39'-20"E 64.23 feet; thence S89°-00'-12"E 267.11 feet to a point on the west line of Spring Rose Road and the point of termination. The side lot lines of said easement are to be shortened or lengthened to terminate on said west line of Spring Rose Road

WISCONSIN
CRAIG A. KEACH
S-2333
NEENAH
WIS.
JULY 12, 2017
LAND SURVEYOR

PARENT PARCEL

ALL THAT PARCEL OF LAND IN DANE COUNTY, STATE OF WISCONSIN, AS MORE FULLY DESCRIBED IN DEED DOC # 2212790, ID# 054/0607-241-9550-0, BEING KNOWN AND DESIGNATED AS FOLLOWS

PARCEL A:
LOT TWO (2), CERTIFIED SURVEY MAP NO. 5284, RECORDED IN VOLUME 24 OF CERTIFIED SURVEYS, PAGE 84 AS DOCUMENT NO. 2030592

(BEING A PART OF THE EAST ONE-HALF OF THE NORTHEAST QUARTER OF SECTION 24, TOWNSHIP 6 NORTH, RANGE 7 EAST, TOWN OF SPRINGDALE, DANE COUNTY, WISCONSIN.)

PARCEL B:
THE NORTHEAST 1/4 AND THE NORTHWEST 1/4 OF THE SOUTHEAST 1/4 OF SECTION 24, TOWNSHIP 6 NORTH, RANGE 7 EAST, TOWN OF SPRINGDALE, EXCEPT THE FOLLOWING:

1. CERTIFIED SURVEY MAP NO. 2403, RECORDED IN VOLUME 9 OF CERTIFIED SURVEYS, PAGES 293 AND 294, AS DOCUMENT NO. 1518861.
2. LAND CONVEYED IN WARRANTY DEED, RECORDED IN VOLUME 818 OF DEEDS, PAGE 586, AS DOCUMENT NO. 1161817.
3. LAND CONVEYED IN WARRANTY DEED, RECORDED IN VOLUME 818 OF DEEDS, PAGE 588, AS DOCUMENT NO. 1161818.
4. LAND CONVEYED IN WARRANTY DEED, RECORDED IN VOLUME 838 OF DEEDS, PAGE 551, AS DOCUMENT NO. 1192091.
5. LAND CONVEYED IN WARRANTY DEED, RECORDED IN VOLUME 4763 OF RECORDS, PAGE 15, AS DOCUMENT NO. 1792889.
6. CERTIFIED SURVEY MAP NO. 4380, RECORDED IN VOLUME 19 OF CERTIFIED SURVEYS, PAGE 32, AS DOCUMENT NO. 1838897.
7. LAND CONVEYED IN WARRANTY DEED, RECORDED IN VOLUME 6877 OF RECORDS, PAGE 71, AS DOCUMENT NO. 1883274.
8. LAND CONVEYED IN WARRANTY DEED, RECORDED IN VOLUME 6880 OF RECORDS, PAGE 24, AS DOCUMENT NO. 1883353.
9. LAND CONVEYED IN WARRANTY DEED, RECORDED IN VOLUME 7715 OF RECORDS, PAGE 11, AS DOCUMENT NO. 1918446.
10. LAND CONVEYED IN WARRANTY DEED, RECORDED IN VOLUME 7716 OF RECORDS, PAGE 81, AS DOCUMENT NO. 1918446.
11. LOTS ONE (1) AND TWO (2), CERTIFIED SURVEY MAP NO. 4843, RECORDED IN VOLUME 21 OF CERTIFIED SURVEYS, PAGE 238, AS DOCUMENT NO. 1913993.

SUBJECT TO AND TOGETHER WITH A CERTAIN EASEMENT AS FULLY SET FORTH IN VOLUME 13954 OF RECORDS, PAGE 42, AS DOCUMENT NO. 2189252.

THIS DEED IS GIVEN TO CORRECT THE DEED RECORDED IN VOLUME 10594 OF RECORDS, PAGES 7 AND 8, AS DOCUMENT NO. 2044742.

TITLE REPORT REVIEW

TITLE REPORT: AMC SETTLEMENT SERVICES

COMMITMENT NO. 23691604

EFFECTIVE DATE: DECEMBER 15, 2016

FEE SIMPLE TITLE VESTED IN: BETTY J. STIVARIUS, SURVIVING WIDOW OF WILLIAM R. STIVARIUS

NOTE: THE STATEMENT OF APPLICABILITY REFERS TO THE LEASE SITE AND ANY EASEMENTS PERTINENT THEREUNTO WHERE SPECIFIC ENCUMBRANCES AFFECT THE LEASE SITE AND/OR A PERTINENT EASEMENT, THEY ARE IDENTIFIED AS SUCH.

SCHEDULE B-II

(1-10) THESE ARE GENERAL STATEMENTS AND NOT SPECIFIC ENCUMBRANCES.

(11) SUBJECT TO ELECTRIC LINE EASEMENT FROM HULDREICH ZURBUCHEN AND HELEN ZURBUCHEN TO WISCONSIN POWER AND LIGHT COMPANY, AS SET FORTH IN DOC# 986116 AND RECORDED 08/14/1959, DANE COUNTY RECORDS. **THIS EASEMENT CONTAINS AN AMBIGUOUS DESCRIPTION AND CANNOT BE RETRACED. APPLIES TO PARENT PARCEL.**

SUBJECT TO THOM R. GRENLIE CERTIFIED SURVEY MAP #4843, AS SET FORTH IN DOC# 1913993 AND RECORDED 12/17/1985, DANE COUNTY RECORDS. **THIS SURVEY DISCLOSES A SEPTIC EASEMENT. APPLIES TO PARENT PARCEL AND IS PLOTTED AND SHOWN.**

SUBJECT TO AMENDMENT TO WELL AGREEMENT AND EASEMENT BY AND BETWEEN HELEN M. ZURBUCHEN, A/K/A HELEN ZURBUCHEN, INDIVIDUALLY AND AS PERSONAL REPRESENTATIVE OF THE ESTATE OF HULDREICH ZURBUCHEN, RONALD L. HEFTY AND DIANE M. HEFTY, HUSBAND AND WIFE, AND THEODORE S. SMITH AND DIANE K. SMITH, HUSBAND AND WIFE, AS SET FORTH IN DOC# 2016640 AND RECORDED 05/08/1987, DANE COUNTY RECORDS. **THIS IS NOT A SURVEY RELATED MATTER.**

SUBJECT TO THOM R. GRENLIE CERTIFIED SURVEY MAP #5284, AS SET FORTH IN DOC# 2030592 AND RECORDED 07/06/1987, DANE COUNTY RECORDS. **THIS SURVEY CREATED THE PARENT PARCEL AND DISCLOSES A SEPTIC EASEMENT. APPLIES TO PARENT PARCEL AND IS PLOTTED AND SHOWN.**

SUBJECT TO DESIGNATION OF TOD BENEFICIARY WHEREAS BETTY J. HAWKINSON FKA BETTY J. STIVARIUS NAMES ROBERT H. STIVARIUS TOD BENEFICIARY UPON HER DEATH, AS SET FORTH IN DOC #5044751, RECORDED 12/19/2013, DANE COUNTY RECORDS. **THIS IS NOT A SURVEY.RELATED MATTER.**

(12-13) THESE ARE GENERAL STATEMENTS AND NOT SPECIFIC ENCUMBRANCES.

SURVEYED FOR:
Edge
Consulting Engineers, Inc.
624 Water Street
Prairie du Sac, WI 53578
608.644.1449 voice
608.644.1549 fax
www.edgeconsult.com

SURVEYED FOR:
verizon
1515 WOODFIELD ROAD
SUITE 1400
SCHAUMBURG, IL 60173

MERIDIAN SURVEYING, LLC
N8774 Firelane 1
Menasha, WI 54952
Office: 920-993-0881
Fax: 920-273-6037

SITE NAME: JENNA DRIVE

SITE NUMBER: 287996

SITE ADDRESS: 2381 ZURBUCHEN DRIVE
VERONA, WI 53593

PROPERTY OWNER:
BETTY STIVARIUS
304 WELSH STREET
REWEY, WI 53580

PARCEL NO.: 054/0607-241-9550-0

ZONED: A-1

DEED: DOCUMENT NO. 5044751

LEASE EXHIBIT

FOR
VERIZON WIRELESS PERSONAL COMMUNICATIONS LP d/b/a VERIZON WIRELESS

BEING A PART OF SE1/4 OF THE NE1/4 OF SECTION 24, T.6N., R.7E., TOWN OF SPRINGDALE, DANE COUNTY, WISCONSIN

NO.	DATE	DESCRIPTION	BY
3	5/15/17	Added Text	JB
2	3/29/17	Revised Lease Area	JD
1	2/28/17	Preliminary Survey	JD

DRAWN BY: J.D.	FIELD WORK DATE: 2/7/17
CHECKED BY: C.A.K.	FIELD BOOK: M-40, PG.52
JOB NO.: 9042	SHEET 3 OF 3

AERIAL OVERVIEW

EXISTING SITE OVERVIEW (LOOKING SOUTHWEST)

DISTANCE FROM TOWER CENTER TO PROPERTY LINES:

- TOWER C/L TO WEST PROPERTY LINE = 27'-3" ±
- TOWER C/L TO SOUTH PROPERTY LINE = 52'-1" ±
- TOWER C/L TO EAST PROPERY LINE = 453'-6" ±

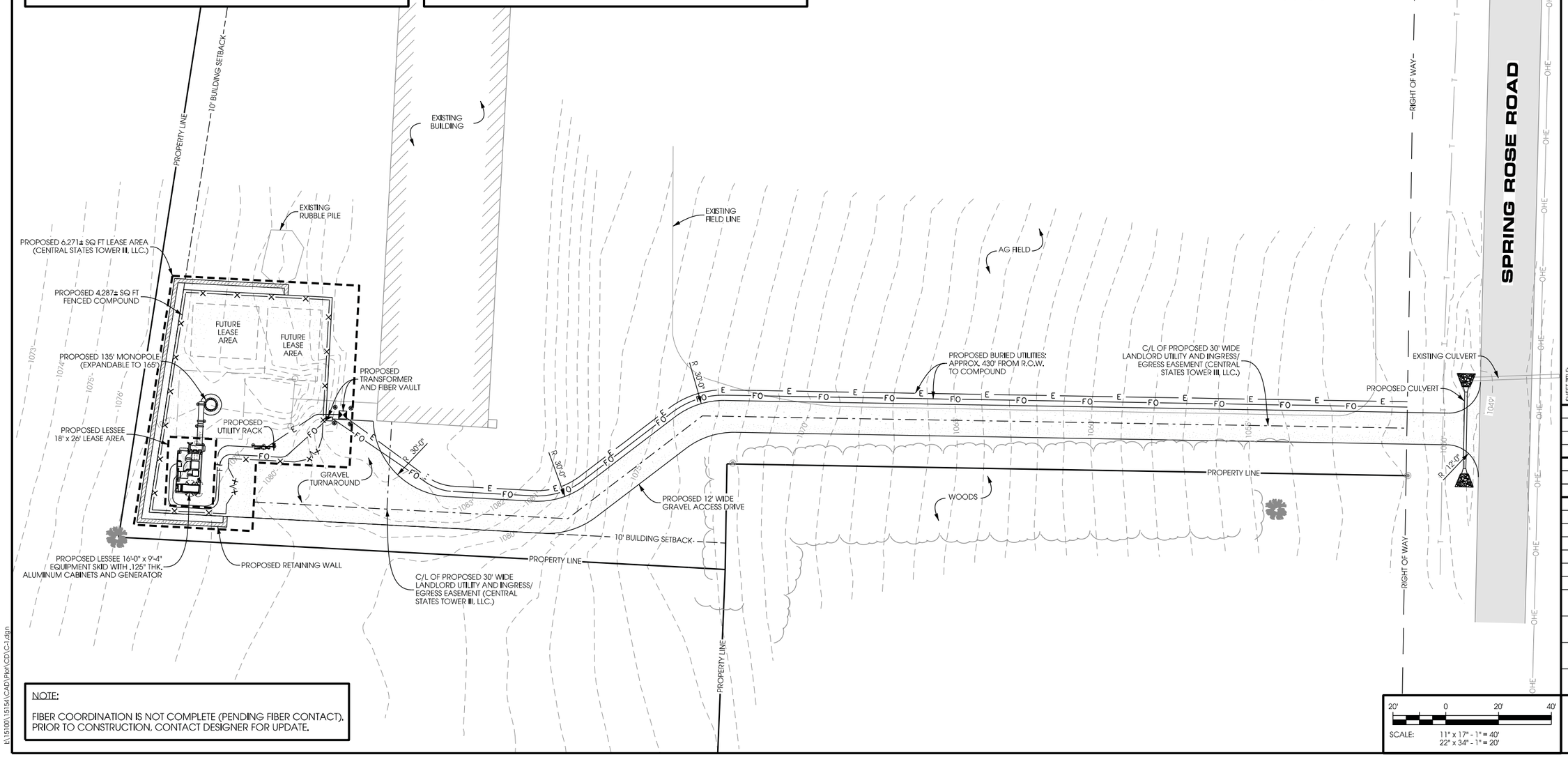

NOTE:

FIBER COORDINATION IS NOT COMPLETE (PENDING FIBER CONTACT). PRIOR TO CONSTRUCTION, CONTACT DESIGNER FOR UPDATE.

20' 0 20' 40'

SCALE: 11" x 17" - 1" = 40'
22" x 34" - 1" = 20'

Edge Consulting Engineers, Inc.
624 Water Street
Prairie du Sac, WI 53578
608.644.1449 voice
608.644.1549 fax
www.edgeconsult.com

SITE PLAN
JENNA DR [2887996]
VERONA, WISCONSIN

SHEET TITLE:

PRELIMINARY DWGS:	INIT:
CD 90's V.1 - 03/31/2017	CV
STAMPED PERMIT DWGS:	
STAMPED FINAL DWGS:	
FINAL CDs V.1 - 07/12/2017	NAT

CHECKED BY: PCM
PLOT DATE: 7/12/2017
PROJECT #: 15154
FILE NAME: C-1.dgn

SHEET NUMBER: **C-1**

I:\15100\15154\CAD\Plot\CD\C-1.dgn

© EDGE CONSULTING ENGINEERS, INC.

NORTH

10'-0" BUILDING SETBACK

PROPERTY LINE

RUBBLE PILE

PRO. 70'-11" LEASE AREA (CST)

PRO. 54'-6" FENCE SECTION

5'-0"

11'-0"

6'-0"

6'-0"

EXISTING BUILDING

PROPOSED 4,287± SQ FT FENCED COMPOUND

FUTURE LEASE AREA

FUTURE LEASE AREA

PROPOSED RETAINING WALL: SEE DETAIL ON PAGE C-5

42'-0"

PRO. 52'-1" FENCE SECTION

PRO. 69'-0" LEASE AREA (CST)

PRO. 95'-6" LEASE AREA (CST)

PRO. 83'-5" FENCE SECTION

PROPOSED 135' MONOPOLE (EXPANDABLE TO 165')

16'-0"

EXISTING FARM EQUIPMENT TO BE REMOVED

PROPOSED LESSEE 18' x 26' LEASE AREA

PROPOSED UTILITY RACK. SEE PAGE E-2

11'-0"

PRO. 14'-0" GATE

PROPOSED LESSEE 16'-0" x 9'-4" EQUIPMENT SKID AND GENERATOR

35'-6" LEASE

PROPOSED 6,271± SQ FT LEASE AREA (CENTRAL STATES TOWER III, LLC.)

PROPOSED BURIED UTILITIES: APPROX. 430' FROM R.O.W. TO COMPOUND

PROPOSED 12' WIDE GRAVEL ACCESS DRIVE

5'-0"

26'-0" LEASE

6'-8"

PRO. 28'-0" FENCE SECTION

10'-4"

5'-0"

EXISTING TREE (TYP.)

PRO. 45'-0" LEASE AREA (CST)

C/L OF PROPOSED 30' WIDE LANDLORD UTILITY AND INGRESS/ EGRESS EASEMENT (CENTRAL STATES TOWER III, LLC.)

PROPERTY LINE

10'-0" BUILDING SETBACK

1073' 1074' 1075' 1080' 1081' 1082' 1083'

PROPOSED LEASE AREA [LOOKING SOUTHWEST]

10' 0 10' 20'

SCALE: 11" x 17" - 1" = 20'
22" x 34" - 1" = 10'

Edge Consulting Engineers, Inc.
624 Water Street
Prairie du Sac, WI 53578
608.644.1449 voice
608.644.1549 fax
www.edgeconsult.com

COMPOUND PLAN
JENNA DR [287996]
VERONA, WISCONSIN

SHEET TITLE:

PRELIMINARY DWGS:	INI:
CD 90's V.1 - 03/31/2017	CV
STAMPED PERMIT DWGS:	
STAMPED FINAL DWGS:	
FINAL CDs V.1 - 07/12/2017	NAT

CHECKED BY: PCM

PLOT DATE: 7/12/2017

PROJECT #: 15154

FILE NAME: C-2.dgn

SHEET NUMBER: C-2

I:\15100\15154\CAD\Plot\CD\C-2.dgn

© EDGE CONSULTING ENGINEERS, INC.

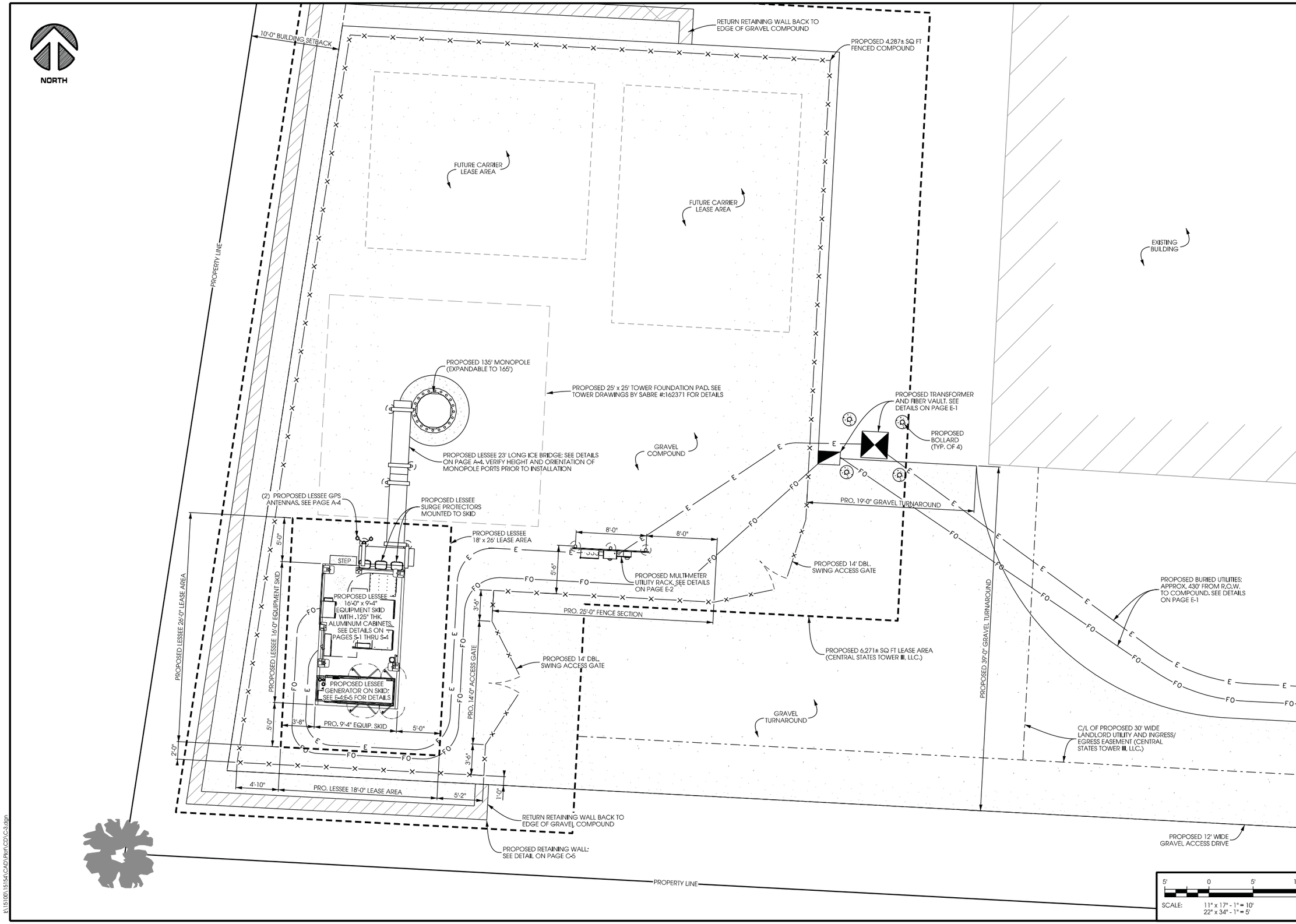

Edge
Consulting Engineers, Inc.
624 Water Street
Prairie du Sac, WI 53578
608.644.1449 voice
608.644.1549 fax
www.edgeconsult.com

SHEET TITLE:

ENLARGED COMPOUND PLAN
JENNA DR [2887996]
VERONA, WISCONSIN

PRELIMINARY DWGS:	INI:
CD 90's V.1 - 03/31/2017	CV
STAMPED PERMIT DWGS:	
STAMPED FINAL DWGS:	
FINAL CDs V.1 - 07/12/2017	NAT

CHECKED BY: PCM

PLOT DATE: 7/12/2017

PROJECT #: 15154

FILE NAME: C-3.dgn

5' 0 5' 10'

SCALE: 11" x 17" - 1" = 10'
22" x 34" - 1" = 5'

SHEET NUMBER: C-3

I:\15100\15154\CAD\Plan\CD\C-3.dgn

© EDGE CONSULTING ENGINEERS, INC.

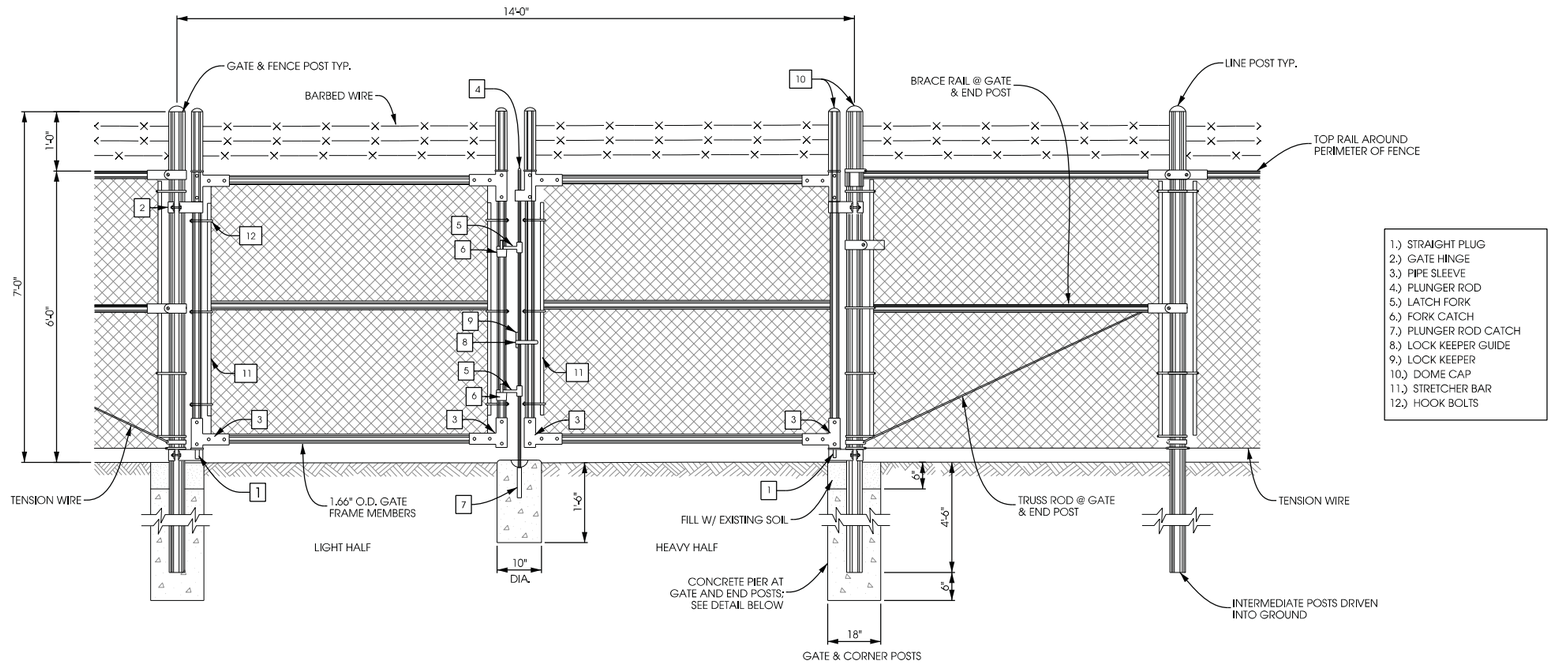

1.) STRAIGHT PLUG
2.) GATE HINGE
3.) PIPE SLEEVE
4.) PLUNGER ROD
5.) LATCH FORK
6.) FORK CATCH
7.) PLUNGER ROD CATCH
8.) LOCK KEEPER GUIDE
9.) LOCK KEEPER
10.) DOME CAP
11.) STRETCHER BAR
12.) HOOK BOLTS

A VEHICLE GATE

SCALE : NTS

NOTES:

PIER REINFORCING USED FOR FENCE POSTS.

MAINTAIN 3" MINIMUM REBAR COVER IN ALL DIRECTIONS.

PIER FOUNDATION DEPTH TO BE A MINIMUM OF 48"; DEPTH TO EXCEED LOCAL FROST DEPTH.

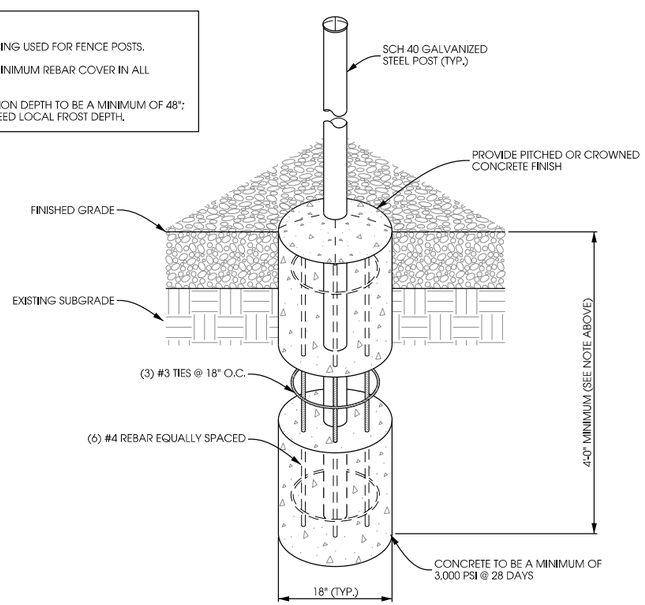

B FENCE PIER FOUNDATION DETAIL

SCALE: 11" x 17" - 1/2" = 1'-0"
22" x 34" - 1" = 1'-0"

FENCING NOTES
(IF DIFFERENT SPECIFICATION THAN PAGES (SP-1 AND SP-2) THESE NOTES WILL SUPERCEDE)

ALL FENCING USED BY THE GC MUST MEET OR EXCEED THE FOLLOWING:

HARDWARE SHALL BE STAINLESS STEEL OR HOT DIPPED GALVANIZED. 9 GAUGE 2 INCH OR SMALLER MESH.

ALL POSTS AND BRACING MUST BE SCHEDULE 40

AROUND THE COMPOUND PERIMETER. THE GC SHALL INSTALL A COMMERCIAL-GRADE GALVANIZED 7' HIGH CHAIN LINK FENCE WITH A TOP RAIL THREE STRANDS OF BARBED WIRE FACING OUT AT THE TOP, AND A CONTINUOUS STRETCH WIRE AT THE BOTTOM. THE GC SHALL REFER TO SITE PLAN FOR DIMENSIONS.

ON COLLOCATIONS THE NEW FENCING MUST MATCH EXISTING FENCING.

THE GC SHALL PROVIDE 14' WIDE ENTRANCE (REFER TO DRAWINGS FOR SITE SPECIFIC DETAILS). THE GC SHALL BOND GATE TO FENCE WITH FLEXIBLE BOND STRAPS. THE TOP RAIL OF THE FENCE WILL BE ELECTRICALLY BONDED AT ALL CORNERS (4) AND AT ALL JOINTS BY THE GC.

THE FENCE IS TO BE CADWELDED BY THE GC TO THE TOWER GROUND RING.

** IN ADDITION TO ALL OTHER NECESSARY SAFETY AND CUSTOMARY PRECAUTIONS, THE GC IS OBLIGATED TO TAKE: THE GC SHALL INSTALL ORANGE TEMPORARY FENCING AROUND THE PERIMETER, WHICH IS OF SUFFICIENT HEIGHT AND STRUCTURAL INTEGRITY TO PREVENT ACCESS TO THE SITE WHEN THE GC IS NOT PRESENT AT THE PROJECT SITE.

Edge Consulting Engineers, Inc.
624 Water Street
Prairie du Sac, WI 53578
608.644.1449 voice
608.644.1549 fax
www.edgeconsult.com

FENCE DETAILS
JENNA DR [2887996]
VERONA, WISCONSIN

SHEET TITLE:

PRELIMINARY DWGS:	INT:
CD 90's V.1 - 03/31/2017	CV
STAMPED PERMIT DWGS:	
STAMPED FINAL DWGS:	
FINAL CDs V.1 - 07/12/2017	NAT

CHECKED BY: PCM
PLOT DATE: 7/12/2017
PROJECT #: 15154
FILE NAME: C-4.dgn
SHEET NUMBER: C-4

k:\15100\15154\CAD\Plot\CD\C-4.dgn

© EDGE CONSULTING ENGINEERS, INC.

NOTES:

REMOVE ALL TOPSOIL, ORGANIC MATERIAL AND WET OR POOR SOILS ALONG ACCESS DRIVE. CONTRACTOR TO REVIEW SITE CONDITIONS AND CONSULT GEOTECHNICAL REPORT FOR ANTICIPATED DEPTH OF SOILS THAT WILL REQUIRE REMOVAL. IF POOR SOILS ARE ENCOUNTERED AT A DEPTH OF MORE THAN 12", CONTACT CONSTRUCTION MANAGER FOR GUIDANCE.

SUBGRADE TO BE COMPACTED TO 95% MODIFIED PROCTOR AND VERIFIED BY PROOF-ROLL OR GEOTECHNICAL RECOMMENDATIONS.

CONSULT GRADING PLAN OR SITE PLAN FOR FINAL SITE GRADES.

RESTORATION:

THE CONTRACTOR SHALL BE RESPONSIBLE FOR GRAVEL ACCESS DRIVE REPAIR AND RESTORATION FOLLOWING CONSTRUCTION COMPLETION. ANY DISTURBED OR DAMAGED AREAS SHALL BE RESTORED TO THEIR ORIGINAL OR BETTER CONDITION UPON COMPLETION OF WORK.

GRAVEL DRIVE REQUIREMENTS:

THICKNESS OF GRAVEL ACCESS DRIVE BASE COURSE TO BE DETERMINED BASED ON THE EXISTING SOIL BEARING CAPACITY (PER UFC DESIGN RECOMMENDATIONS):

BEARING CAPACITY	REQ'D AGGREGATE THICKNESS
1000 PSF	* 16" MIN.
1500 PSF	12" MIN.
≥ 2000 PSF	8" MIN. (SEE DETAIL)

IF POOR OR WET SOILS ARE PRESENT BELOW BASE COURSE, CONTRACTOR TO INSTALL 6" MIN. WELL-GRADED GRAVEL/SAND SUB-BASE TO FACILITATE ADEQUATE DRAINAGE AND STABILITY.

FOR ACCESS DRIVE SLOPES GREATER THAN 10%, CONTRACTOR TO USE MIRAFI HP 270 OR EQUIVALENT GEOTEXTILE FABRIC.

CONSULT GEOTECHNICAL REPORT FOR ANTICIPATED SOIL CONDITIONS.

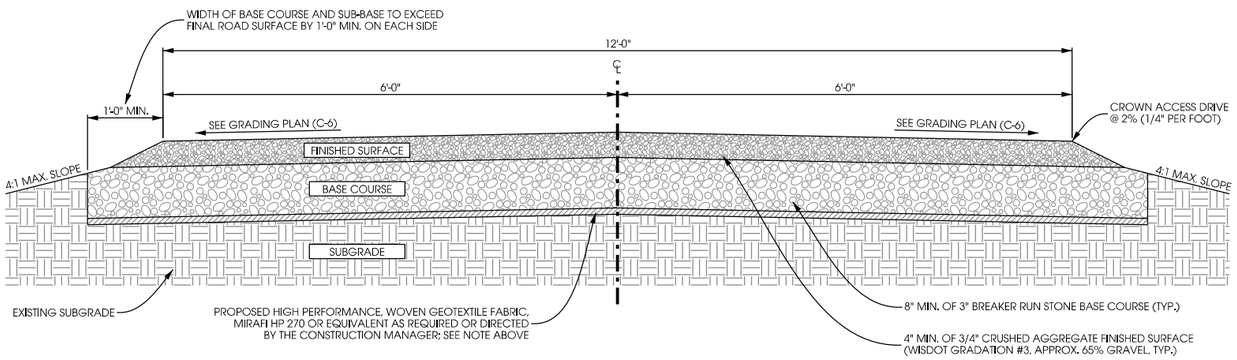

A GRAVEL DRIVE CROSS SECTION

SCALE: NTS

NOTES:

MAINTAIN 3" MINIMUM REBAR COVER IN ALL DIRECTIONS.

PIER FOUNDATION DEPTH TO BE A MINIMUM OF 48"; DEPTH TO EXCEED LOCAL FROST DEPTH.

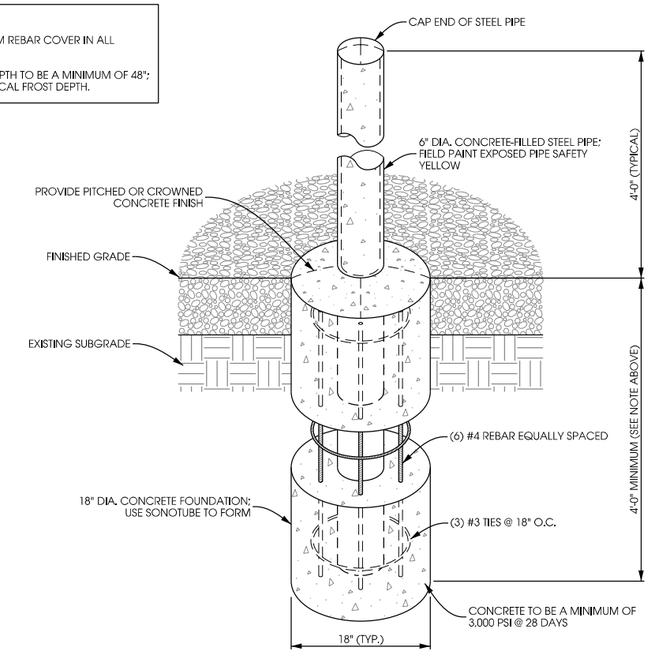

B PIPE BOLLARD DETAIL

SCALE: NTS

NOTES:

REMOVE ALL TOPSOIL, ORGANIC MATERIAL AND WET OR POOR SOILS WITHIN COMPOUND AREA. CONTRACTOR TO REVIEW SITE CONDITIONS AND CONSULT GEOTECHNICAL REPORT FOR ANTICIPATED DEPTH OF SOILS THAT WILL REQUIRE REMOVAL. IF POOR SOILS ARE ENCOUNTERED AT A DEPTH OF MORE THAN 2'-0", ADDITIONAL SELECT FILL MAY BE REQUIRED. CONTACT CONSTRUCTION MANAGER FOR GUIDANCE.

FINAL TOWER FOUNDATION DESIGN RECOMMENDATIONS TO SUPERCEDE GRADING PLAN OR SITE PLAN ELEVATIONS.

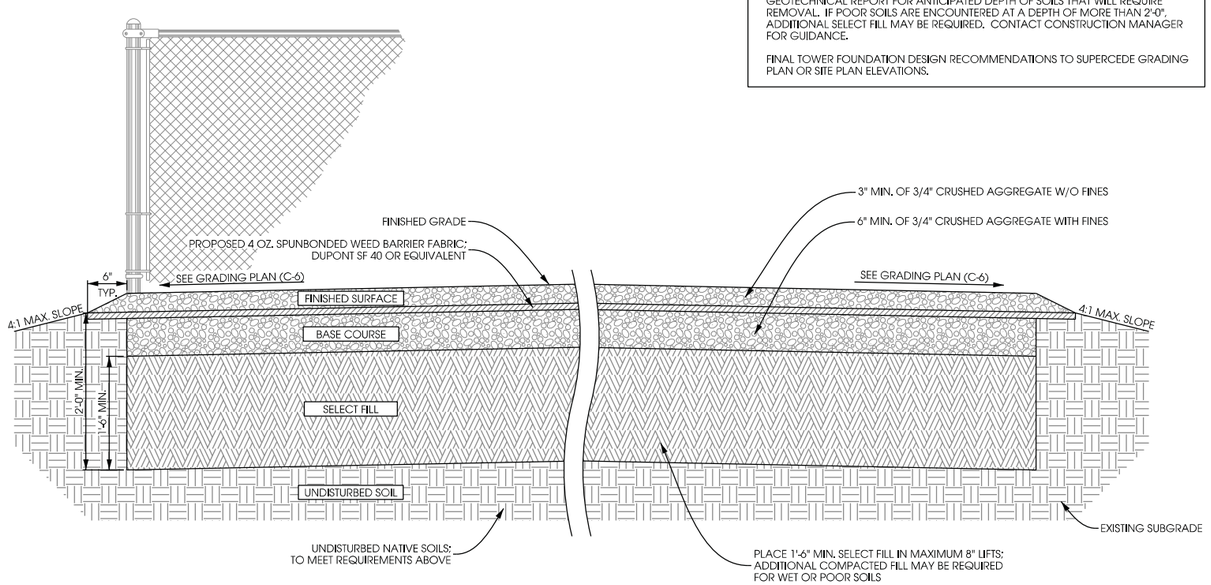

C COMPOUND CROSS SECTION

SCALE: NTS

INSTALLATION NOTES:

1. FOLLOW ALL MFG. DESIGN CHARTS AND INSTALLATION GUIDELINES.
2. RETAINING WALL TO BE INSTALLED BY CONTRACTOR FAMILIAR WITH MODULAR BLOCK RETAINING WALL MATERIALS AND GUIDELINES AND EXPERIENCED WITH AT LEAST (10) PROJECTS OF SIMILAR SIZE AND SCOPE.
3. ALL BACKFILL SOILS SHALL BE COMPACTED TO 95% STANDARD PROCTOR DENSITY IN MAXIMUM 8" LIFTS.
4. DESIGN ASSUMES QUALITY SOILS (SAND, GRAVEL, OR SILTY SAND) MIN. BEARING CAPACITY OF 2500 PSF. CONTRACTOR TO VERIFY.
5. GEOGRID TO BE COATED POLYESTER WITH MINIMUM ALLOWABLE DESIGN STRENGTH OF LTDS = 1350 PK.

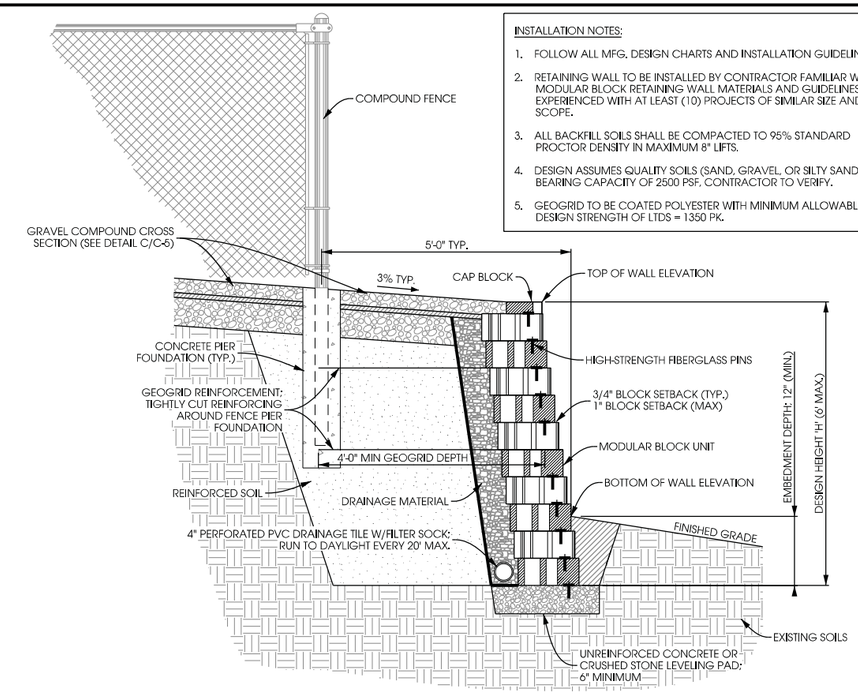

D TYP. BLOCK RETAINING WALL - CROSS SECTION

SCALE: 11" x 17" - 3/8" = 1'-0"
22" x 34" - 3/4" = 1'-0"

Edge Consulting Engineers, Inc.
624 Water Street
Prairie du Sac, WI 53578
608.644.1449 voice
608.644.1549 fax
www.edgeconsult.com

CONSTRUCTION DETAILS
JENNA DR [2887996]
VERONA, WISCONSIN

SHEET TITLE:

PRELIMINARY DWGS:	INT:
CD 90's V.1 - 03/31/2017	CV
STAMPED PERMIT DWGS:	
STAMPED FINAL DWGS:	
FINAL CDs V.1 - 07/12/2017	NAT

CHECKED BY: PCM
PLOT DATE: 7/12/2017
PROJECT #: 15154
FILE NAME: C-5.dgn

SHEET NUMBER: C-5

I:\15100\15154\CAD\Plot\CD\C-5.dgn

© EDGE CONSULTING ENGINEERS, INC.

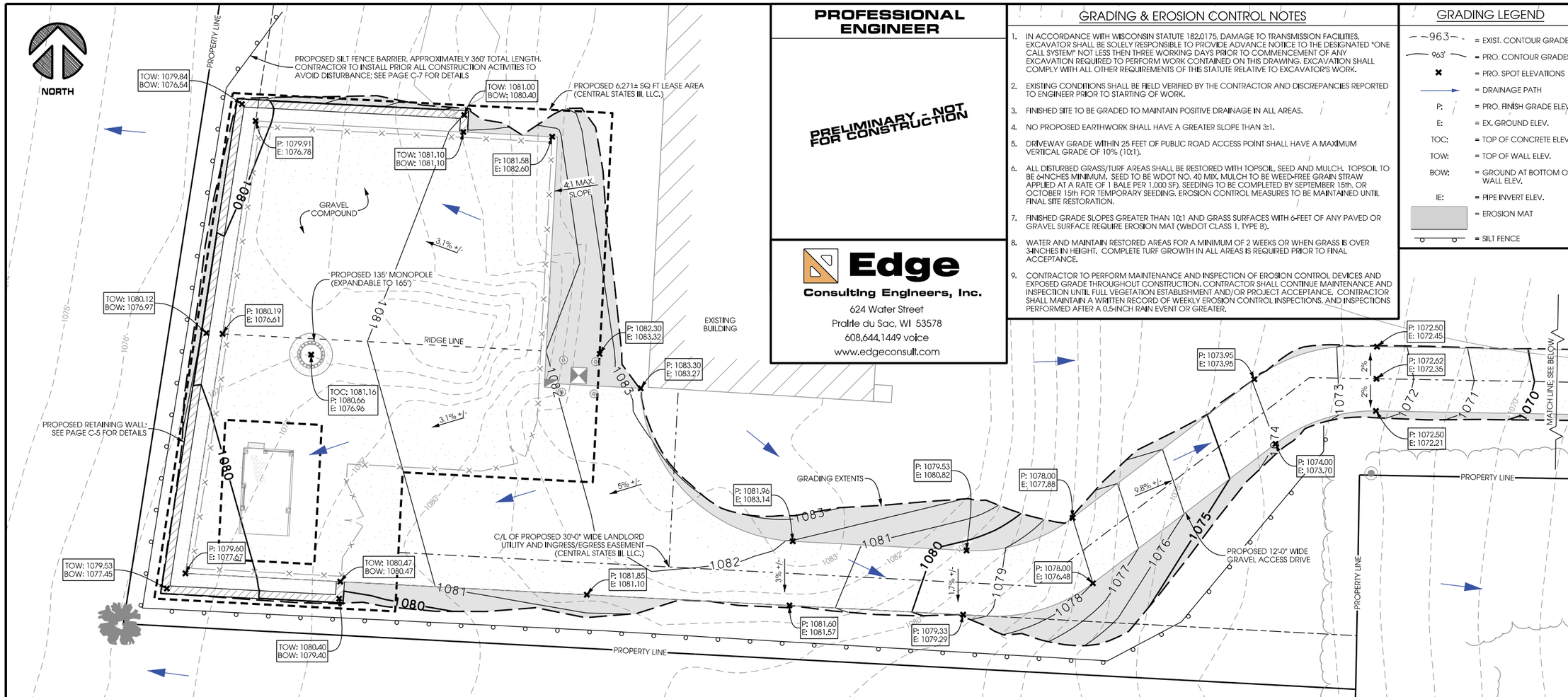

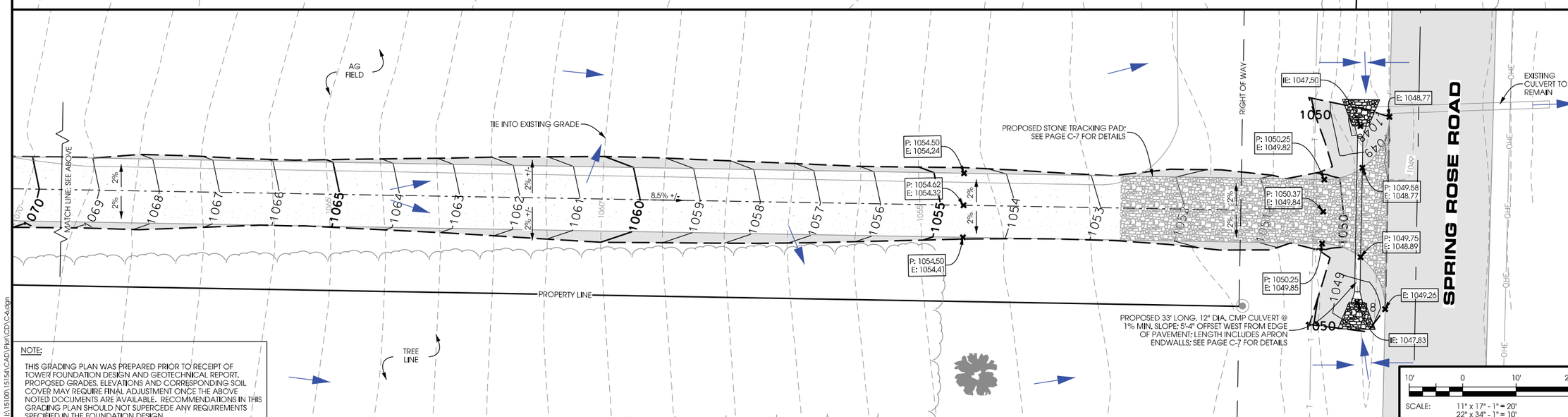

NOTE:

THIS GRADING PLAN WAS PREPARED PRIOR TO RECEIPT OF TOWER FOUNDATION DESIGN AND GEOTECHNICAL REPORT. PROPOSED GRADES, ELEVATIONS AND CORRESPONDING SOIL COVER MAY REQUIRE FINAL ADJUSTMENT ONCE THE ABOVE NOTED DOCUMENTS ARE AVAILABLE. RECOMMENDATIONS IN THIS GRADING PLAN SHOULD NOT SUPERCEDE ANY REQUIREMENTS SPECIFIED IN THE FOUNDATION DESIGN.

PROFESSIONAL ENGINEER

PRELIMINARY - NOT FOR CONSTRUCTION

Edge
Consulting Engineers, Inc.
624 Water Street
Prairie du Sac, WI 53578
608.644.1449 voice
www.edgeconsult.com

GRADING & EROSION CONTROL NOTES

1. IN ACCORDANCE WITH WISCONSIN STATUTE 182.0175, DAMAGE TO TRANSMISSION FACILITIES, EXCAVATOR SHALL BE SOLELY RESPONSIBLE TO PROVIDE ADVANCE NOTICE TO THE DESIGNATED "ONE CALL SYSTEM" NOT LESS THEN THREE WORKING DAYS PRIOR TO COMMENCEMENT OF ANY EXCAVATION REQUIRED TO PERFORM WORK CONTAINED ON THIS DRAWING. EXCAVATION SHALL COMPLY WITH ALL OTHER REQUIREMENTS OF THIS STATUTE RELATIVE TO EXCAVATOR'S WORK.
2. EXISTING CONDITIONS SHALL BE FIELD VERIFIED BY THE CONTRACTOR AND DISCREPANCIES REPORTED TO ENGINEER PRIOR TO STARTING OF WORK.
3. FINISHED SITE TO BE GRADED TO MAINTAIN POSITIVE DRAINAGE IN ALL AREAS.
4. NO PROPOSED EARTHWORK SHALL HAVE A GREATER SLOPE THAN 3:1.
5. DRIVEWAY GRADE WITHIN 25 FEET OF PUBLIC ROAD ACCESS POINT SHALL HAVE A MAXIMUM VERTICAL GRADE OF 10% (10:1).
6. ALL DISTURBED GRASS/TURF AREAS SHALL BE RESTORED WITH TOPSOIL, SEED AND MULCH. TOPSOIL TO BE 6-INCHES MINIMUM. SEED TO BE WDOT NO. 40 MIX. MULCH TO BE WEED-FREE GRAIN STRAW APPLIED AT A RATE OF 1 BALE PER 1,000 SF). SEEDING TO BE COMPLETED BY SEPTEMBER 15th, OR OCTOBER 15th FOR TEMPORARY SEEDING. EROSION CONTROL MEASURES TO BE MAINTAINED UNTIL FINAL SITE RESTORATION.
7. FINISHED GRADE SLOPES GREATER THAN 10:1 AND GRASS SURFACES WITH 6-FEET OF ANY PAVED OR GRAVEL SURFACE REQUIRE EROSION MAT (WISDOT CLASS 1, TYPE B).
8. WATER AND MAINTAIN RESTORED AREAS FOR A MINIMUM OF 2 WEEKS OR WHEN GRASS IS OVER 3-INCHES IN HEIGHT. COMPLETE TURF GROWTH IN ALL AREAS IS REQUIRED PRIOR TO FINAL ACCEPTANCE.
9. CONTRACTOR TO PERFORM MAINTENANCE AND INSPECTION OF EROSION CONTROL DEVICES AND EXPOSED GRADE THROUGHOUT CONSTRUCTION. CONTRACTOR SHALL CONTINUE MAINTENANCE AND INSPECTION UNTIL FULL VEGETATION ESTABLISHMENT AND/OR PROJECT ACCEPTANCE. CONTRACTOR SHALL MAINTAIN A WRITTEN RECORD OF WEEKLY EROSION CONTROL INSPECTIONS, AND INSPECTIONS PERFORMED AFTER A 0.5-INCH RAIN EVENT OR GREATER.

GRADING LEGEND

—963—	= EXIST. CONTOUR GRADES
963'	= PRO. CONTOUR GRADES
✖	= PRO. SPOT ELEVATIONS
→	= DRAINAGE PATH
P:	= PRO. FINISH GRADE ELEV.
E:	= EX. GROUND ELEV.
TOC:	= TOP OF CONCRETE ELEV.
TOW:	= TOP OF WALL ELEV.
BOW:	= GROUND AT BOTTOM OF WALL ELEV.
IE:	= PIPE INVERT ELEV.
	= EROSION MAT
	= SILT FENCE

Edge
Consulting Engineers, Inc.
624 Water Street
Prairie du Sac, WI 53578
608.644.1449 voice
608.644.1549 fax
www.edgeconsult.com

GRADING PLAN
JENNA DR [2887996]
VERONA, WISCONSIN

SHEET TITLE:

PRELIMINARY DWGS:	INI:
CD 90's V.1 - 03/31/2017	CV
STAMPED PERMIT DWGS:	
STAMPED FINAL DWGS:	
FINAL CDs V.1 - 07/12/2017	NAT

CHECKED BY: PCM

PLOT DATE: 7/12/2017

PROJECT #: 15154

FILE NAME: C-6.dgn

SCALE: 11" x 17" - 1" = 20'; 22" x 34" - 1" = 10'

SHEET NUMBER: C-6

I:\15100\15154\CAD\Plot\CD\C-6.dgn

© EDGE CONSULTING ENGINEERS, INC.

NOTES:

1. TRENCH SHALL BE A MINIMUM OF 4" WIDE AND 6" DEEP TO ACHIEVE ADEQUATE GEOTEXTILE FABRIC ANCHORAGE. FOLD MATERIAL TO FIT TRENCH AND BACKFILL AND COMPACT TRENCH WITH EXCAVATED SOIL.
2. WOOD POSTS SHALL BE 1" x 1" x 4'-0" MINIMUM AND CONSIST OF HICKORY OR OAK.
3. 8'-0" POST SPACING IS ALLOWED IF A WOVEN GEOTEXTILE FABRIC IS USED.
4. ADDITIONAL POST DEPTH OR TIE BACKS MAY BE REQUIRED IN UNSTABLE SOIL CONDITIONS.

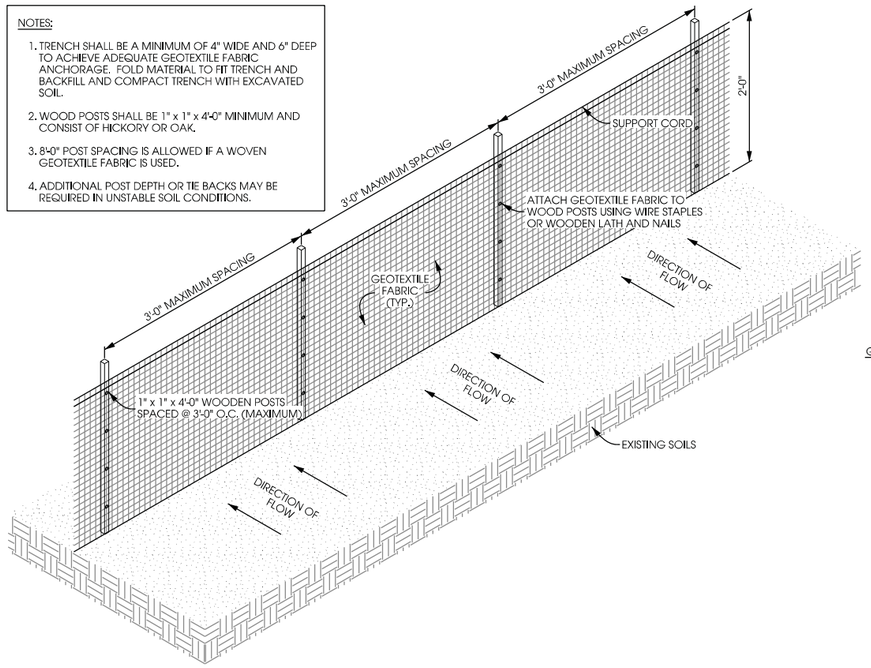

ISOMETRIC VIEW

SCALE: 11" x 17" - 1/2" = 1'-0"
22" x 34" - 1" = 1'-0"

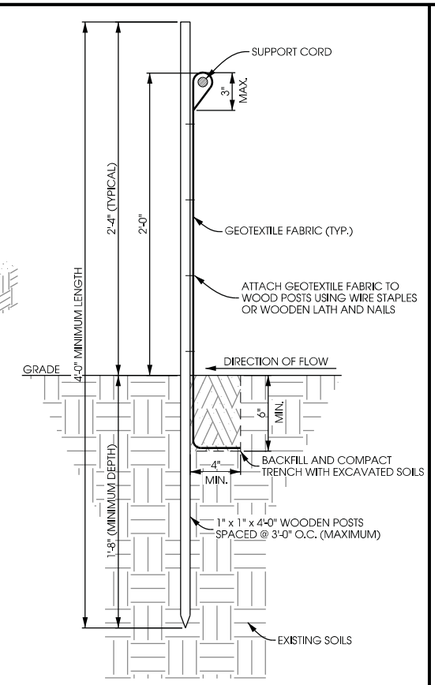

ELEVATION VIEW

SCALE: 11" x 17" - 1" = 1'-0"
22" x 34" - 1" = 2'-0"

A SILT FENCE DETAIL

SCALE: VARIES

NOTES:

- RIP-RAP DIMENSION TO BE DETERMINED BASED ON CULVERT DIAMETER "D".

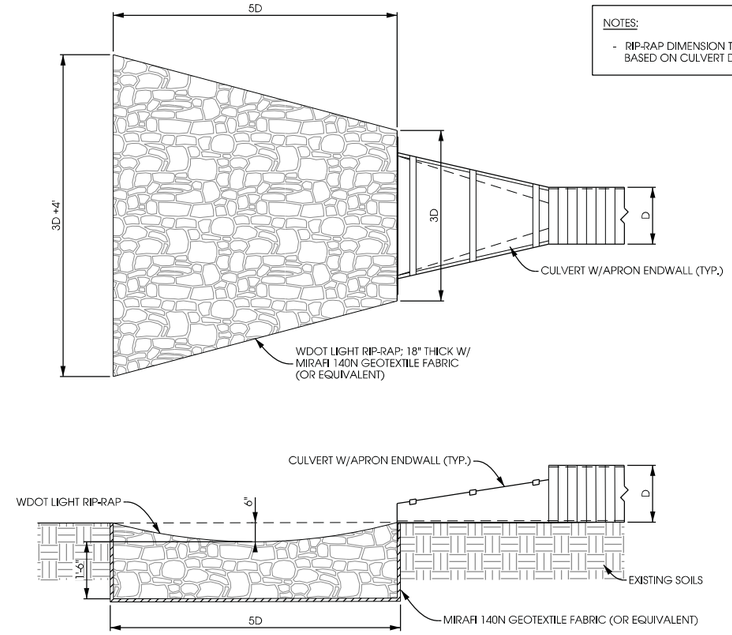

B RIP-RAP ENERGY DISSIPATOR DETAIL

SCALE: NTS

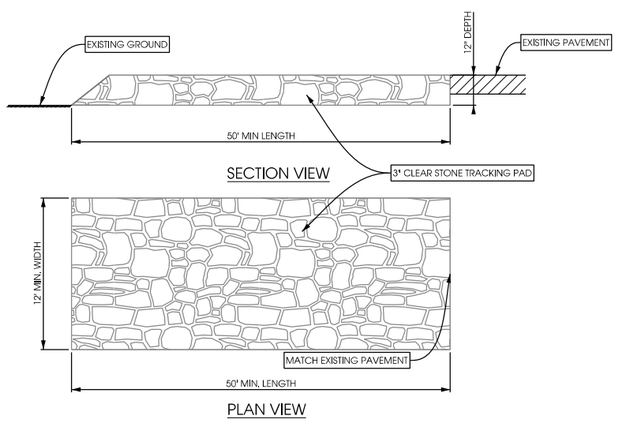

GENERAL NOTES

1. TRACKING PAD WILL BE UNDERLAIN WITH A GEOTEXTILE FABRIC IN ACCORDANCE WITH WDNR TECHNICAL STANDARD 1057

C STONE TRACKING PAD

SCALE: NTS

NOTE:

FOR CULVERT TRENCHES LOCATED OUTSIDE OF ACCESS DRIVE AREAS, BACKFILL MATERIAL MAY BE USED TO ACHIEVE REQUIRED COVER AFTER MINIMUM BEDDING REQUIREMENTS HAVE BEEN MET. BACKFILL MATERIAL TO BE COMPACTED TO 90% MODIFIED PROCTOR AND TO BE FREE OF FROZEN CLODS AND STONES LARGER THAN 6".

GRADE AREAS UPSTREAM AND DOWNSTREAM OF CULVERT TO ACHIEVE POSITIVE DRAINAGE. SEE SITE PLAN OR GRADING PLAN FOR DETAILS.

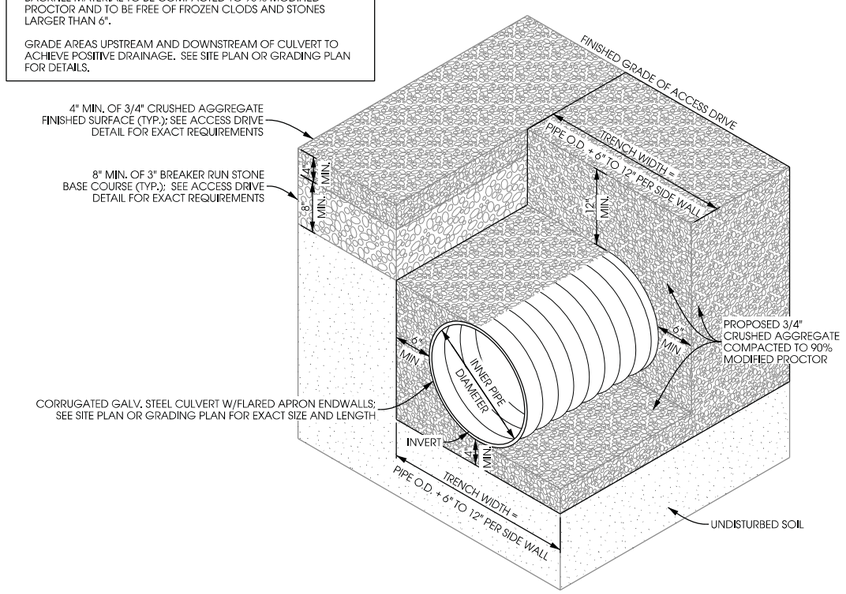

D CULVERT DETAIL

SCALE: NTS

Edge Consulting Engineers, Inc.
624 Water Street
Prairie du Sac, WI 53578
608.644.1449 voice
608.644.1549 fax
www.edgeconsult.com

SITE DETAILS
JENNA DR (2887996)
VERONA, WISCONSIN

SHEET TITLE:

PRELIMINARY DWGS:	INT:
CD 90's V.1 - 03/31/2017	CV
STAMPED PERMIT DWGS:	
STAMPED FINAL DWGS:	
FINAL CDs V.1 - 07/12/2017	NAT

CHECKED BY: PCM
PLOT DATE: 7/12/2017
PROJECT #: 15154
FILE NAME: C-7.dgn
SHEET NUMBER: C-7

I:\15100\15154\CAD\Plan\CD\C-7.dgn

© EDGE CONSULTING ENGINEERS, INC.

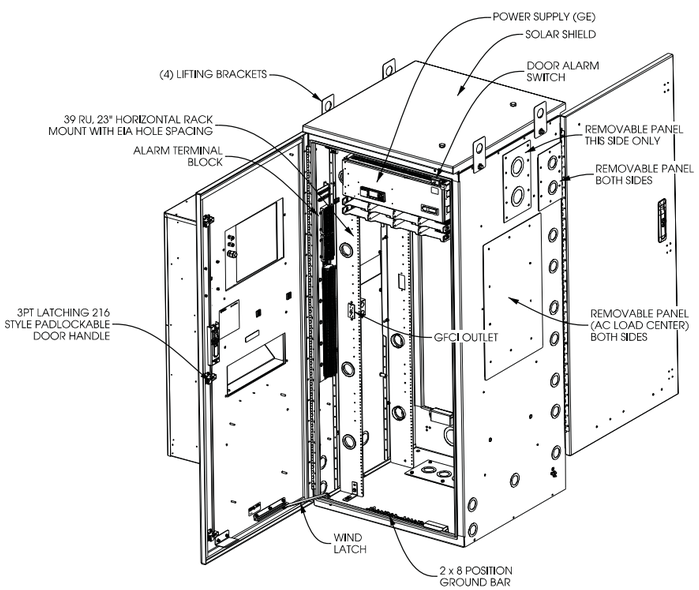

FRONT ISOMETRIC VIEW

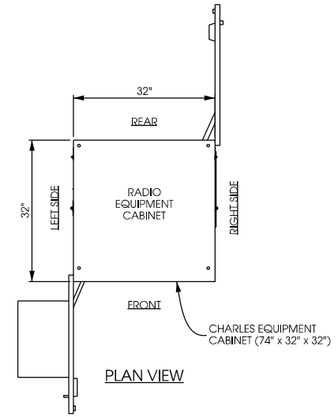

PLAN VIEW

CATEGORY	
DIMENSIONS AND WEIGHT	74" H x 32" W x 32" D 535 LBS AS SHIPPED
23" FRONT AND REAR EQUIPMENT RACK SPACE AND HOLE SPACING	68" (39RU) EIA SPACING WITH TAPPED 12-24 MOUNTING HOLES
COLOR	OFF-WHITE
MATERIAL	.125" WELDED ALUMINUM
MAXIMUM HEAT DISSIPATION	2900W
10000 BTU AIR CONDITIONER WITH 2000W HEATER	DANTHERM #1A/CT-B1000
ELECTRICAL OUTLET	ONE GFCI OUTLET
-48VDC POWER SYSTEM WITH CONTROLLER	GE INFINITY S: NES4824-23-AC5-PS8-DC1E
BONDING AND GROUNDING	(4) 2 x 8-POSITION GROUND BARS
CABLE ENTRANCE	REFER TO DETAIL BELOW
OPERATING TEMP. RANGE, INSIDE ENCLOSURE	-40° TO +149°F, -40° TO 65°C
OPERATING TEMP. RANGE, OUTSIDE ENCLOSURE	-40° TO +115°F, -40° TO 46°C
HUMIDITY	0 TO 95% (NON-CONDENSING)
ALTITUDE	UP TO 2,000 METERS (6560')

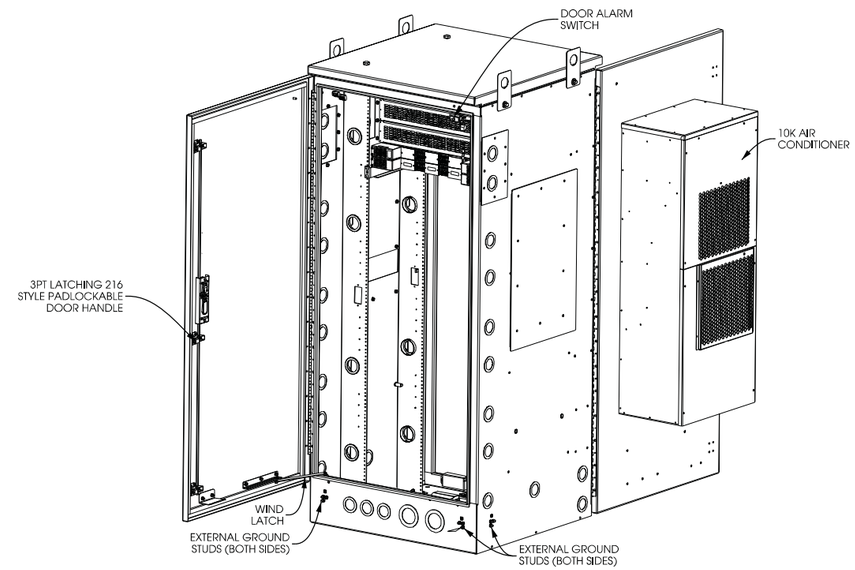

REAR ISOMETRIC VIEW

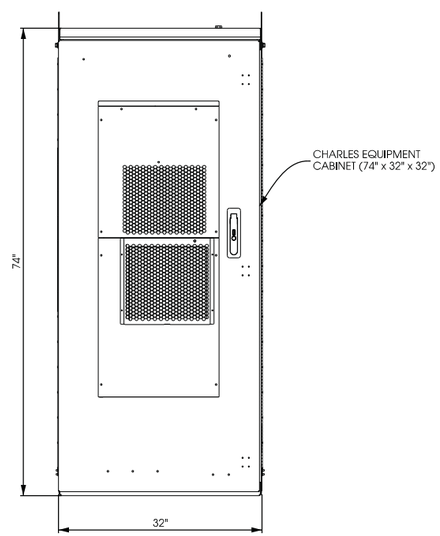

FRONT ELEVATION VIEW

A **CHARLES CUBE PM63912UN3**

SCALE: NTS

Edge Consulting Engineers, Inc.
624 Water Street
Prairie du Sac, WI 53578
608.644.1449 voice
608.644.1549 fax
www.edgeconsult.com

EQUIPMENT DETAILS
JENNA DR [2887996]
VERONA, WISCONSIN

SHEET TITLE:

PRELIMINARY DWGS:	INT:
CD 90's V.1 - 03/31/2017	CV
STAMPED PERMIT DWGS:	
STAMPED FINAL DWGS:	
FINAL CDs V.1 - 07/12/2017	NAT

CHECKED BY: PCM

PLOT DATE: 7/12/2017

PROJECT #: 15154

FILE NAME: S-1.dgn

SHEET NUMBER: **S-1**

I:\15100\15154\CAD\Plot\CD\S-1.dgn

© EDGE CONSULTING ENGINEERS, INC.

CHARLES CUBE-BB48E1HN1	
DIMENSIONS	32" W x 32" W x 74" H
WEIGHT	900 LBS (EMPTY)
WEIGHT	2685 LBS (w/NiCd BTY)
BATTERY SUPPORT	5 STRINGS SAFT TEL. 180, 48V
THERMAL	DAC

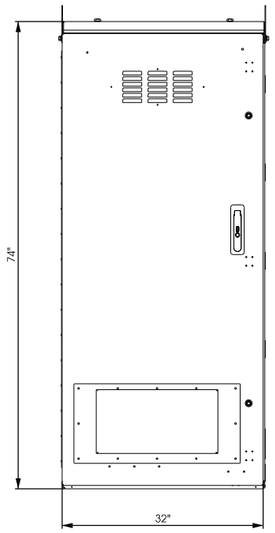

FRONT ELEVATION "A"

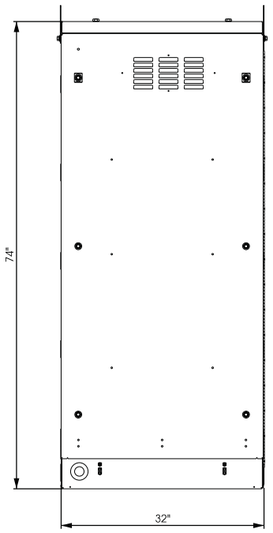

REAR ELEVATION "B"

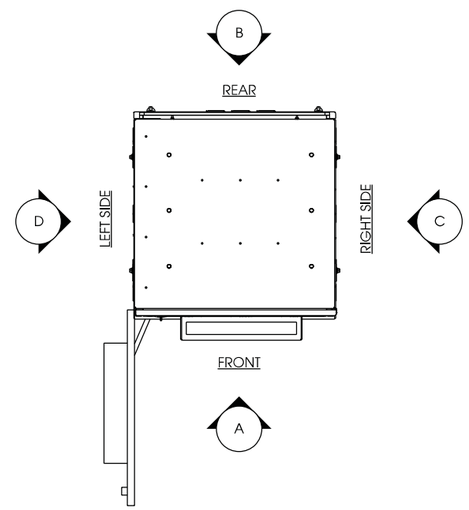

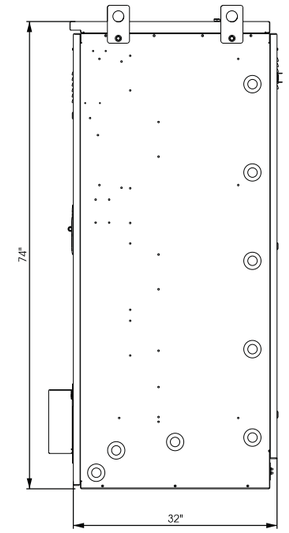

RIGHT ELEVATION "C"

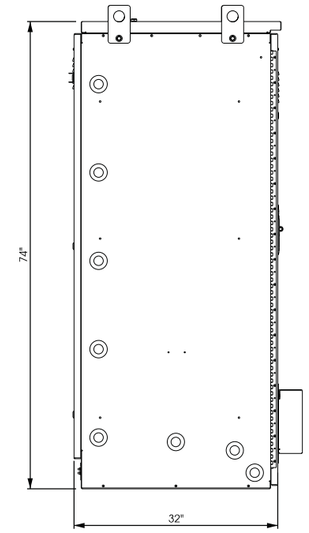

LEFT ELEVATION "D"

A CHARLES CUBE-BB48E1HN1

SCALE: NTS

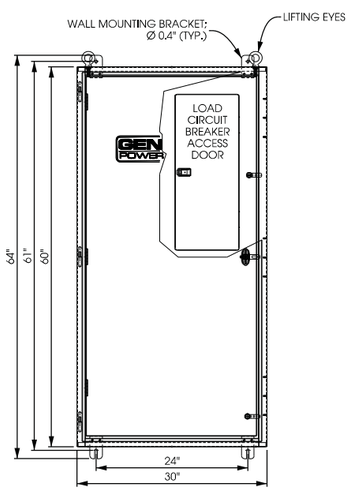

FRONT VIEW

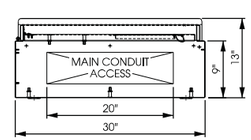

BOTTOM VIEW

ILC RATED AMPS	VOLTAGE	PHASE	ENCLOSURE HEIGHT	ENCLOSURE WIDTH	ENCLOSURE DEPTH	WEIGHT (LBS)
200	120/240	1	60"	30"	10"	350
200	120/208	3	60"	30"	10"	350

B INTEGRATED LOAD CENTER

SCALE: NTS

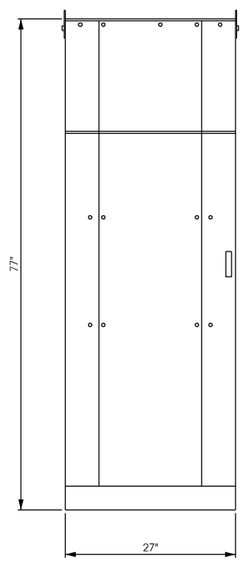

FRONT ELEVATION "A"

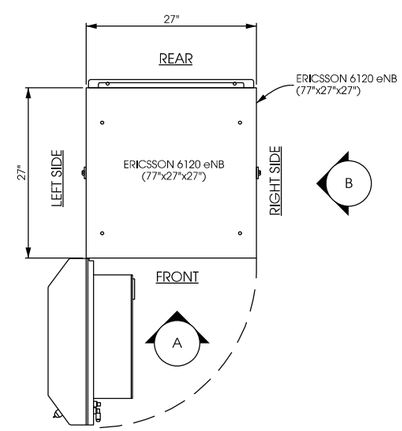

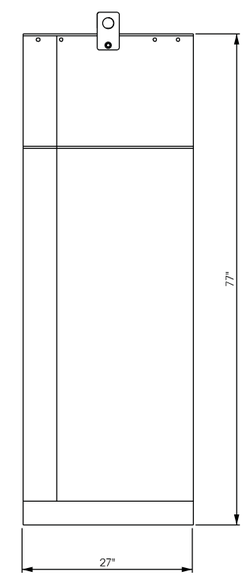

RIGHT ELEVATION "B"

C ERICSSON 6120 eNB CABINET

SCALE: NTS

Edge
Consulting Engineers, Inc.
624 Water Street
Prairie du Sac, WI 53578
608.644.1449 voice
608.644.1549 fax
www.edgeconsult.com

EQUIPMENT DETAILS
JENNA DR [2877996]
VERONA, WISCONSIN

SHEET TITLE:

PRELIMINARY DWGS:	INIT:
CD 90's V.1 - 03/31/2017	CV
STAMPED PERMIT DWGS:	
STAMPED FINAL DWGS:	
FINAL CDs V.1 - 07/12/2017	NAT

CHECKED BY: PCM

PLOT DATE: 7/12/2017

PROJECT #: 15154

FILE NAME: S-2.dgn

SHEET NUMBER: S-2

I:\15100\15154\CAD\Plot\CD\S-2.dgn

© EDGE CONSULTING ENGINEERS, INC.

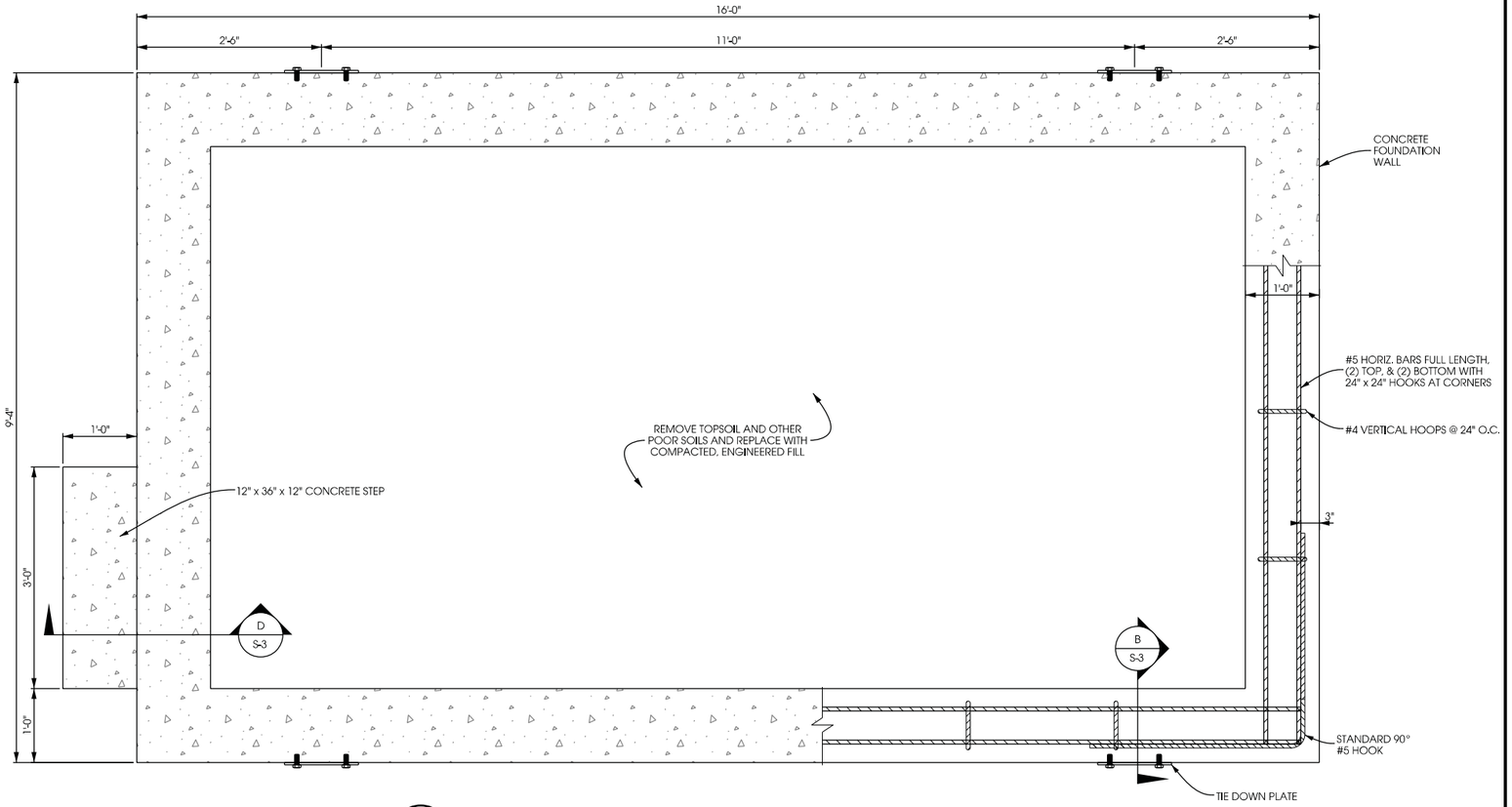

A EQUIPMENT SKID FOUNDATION PLAN

SCALE: NTS

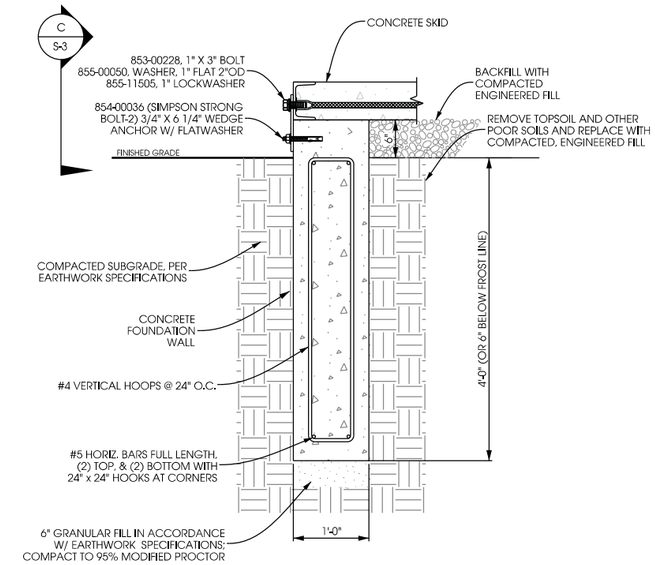

B TYPICAL FOUNDATION

SCALE: NTS

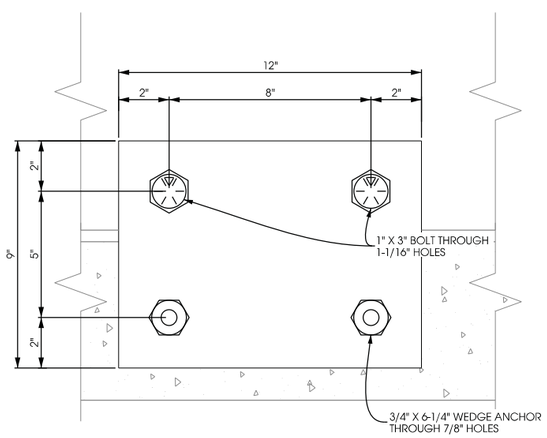

197786 TIE DOWN PLATE
RAW MATERIAL 3/8" PLATE
N.T.S.

C TIE DOWN PLATE DETAILS

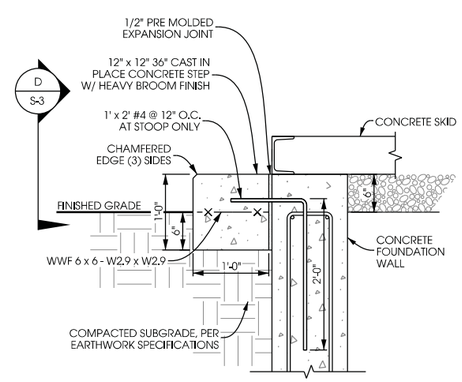

D STEP DETAIL

SCALE: NTS

CONCRETE AND REINFORCING NOTES:

1.) ALL CONCRETE CONSTRUCTION SHALL BE IN ACCORDANCE WITH LOCAL CODE REQUIREMENTS AND MOST CURRENT VERSION OF ACI STANDARDS.

2.) ALL EXPOSED CONCRETE SURFACES EXPOSED TO VIEW SHALL HAVE A SURFACE FINISH SF-2.0 IN ACCORDANCE WITH ACI 301.

3.) ALL CONCRETE UNLESS SPECIFICALLY NOTED SHALL BE NORMAL WEIGHT (145 PCF) AND SHALL ACHIEVE A 28-DAY COMPRESSIVE STRENGTH (f'c) OF 3,000 PSI. EXPOSED EXTERIOR CONCRETE TO BE AIR ENTRAINED WITH 6% AIR CONTENT. CONTRACTOR TO PERFORM CONCRETE SLUMP TEST (4" MAX SLUMP). NO WATER TO BE ADDED AFTER SLUMP HAS BEEN MEASURED.

4.) ALL CONCRETE REINFORCING SHALL BE ASTM A615 GRADE 60 AND PLACED IN ACCORDANCE WITH ACI STANDARDS W/ 3" MIN COVERAGE IF CAST AGAINST EARTH AND 2" MIN COVERAGE OTHERWISE.

5.) REMOVE ALL ORGANIC MATERIAL, SOFT AREAS, AND POOR SOILS BENEATH FOUNDATION TO A DEPTH OF AT LEAST 2'-0" BELOW FOUNDATION.

6.) DESIGN BASED ON GEOTECHNICAL REPORT BY EDGE CONSULTING ENGINEERS, INC. DATED 04/20/2017. CONTRACTOR TO REVIEW & FOLLOW RECOMMENDATIONS CONTAINED IN GEOTECHNICAL REPORT.

7.) SLAB NOT SUITABLE AT SITES WITH ORGANIC SOIL, UNCOMPACTED FILL, EXPANSIVE SOIL, OR SOILS SUSCEPTIBLE TO FROST HEAVE.

8.) CONTRACTOR TO ENSURE POSITIVE DRAINAGE FROM ALL FOUNDATIONS.

9.) FOUNDATION DESIGN BASED ON INFORMATION PROVIDED BY FIBREBOND DATED 10/6/16. DESIGN LOADS ARE IN ACCORDANCE WITH FIBREBOND DESIGN WITH THE EXCEPTION THAT THE SEISMIC LOAD IS REDUCED . THE FOUNDATION DESIGN IS DESIGNED FOR A SPECTRAL RESPONSE COEFFICIENT (SDS) = 0.395 AND SEISMIC IMPORTANCE FACTOR (IE) = 1.00 WHICH CORRESPONDS A REDUCED SEISMIC RESPONSE COEFFIENT (CS) = 0.113. THE PROVIDED SEISMIC LOADS WERE MULTIPLIED BY 0.263, THE RATIO OF THE NEW CS TO ORIGINAL CS. THIS SEISMIC LOAD CORRESPONDS WITH APPROXIMATELY THE NORTHERN END OF FAYETTE COUNTY, IL. CONTRACTOR TO VERIFY EXACT PLATFORM/SKID SIZE AND TYPE.

Edge Consulting Engineers, Inc.
624 Water Street
Prairie du Sac, WI 53578
608.644.1449 voice
608.644.1549 fax
www.edgeconsult.com

FOUNDATION DETAILS
JENNA DR [2887996]
VERONA, WISCONSIN

SHEET TITLE:

PRELIMINARY DWGS:	INI:
CD 90's V.1 - 03/31/2017	CV
STAMPED PERMIT DWGS:	
STAMPED FINAL DWGS:	
FINAL CDs V.1 - 07/12/2017	NAT

CHECKED BY: PCM
PLOT DATE: 7/12/2017
PROJECT #: 15154
FILE NAME: S-3.dgn
SHEET NUMBER: S-3

I:\15100\15154\CAD\Plan\CD\S-3.dgn

© EDGE CONSULTING ENGINEERS, INC.

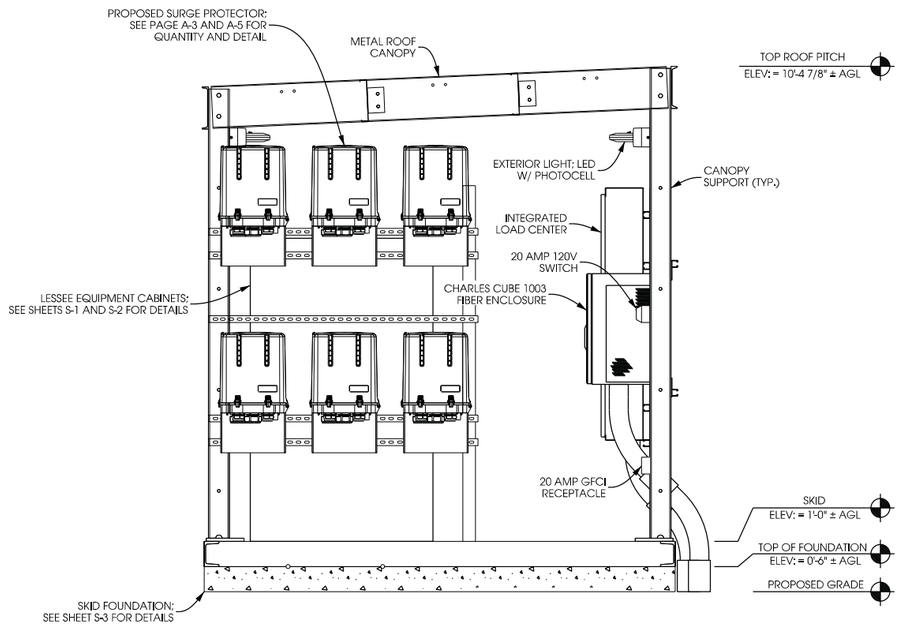

ELEVATION A

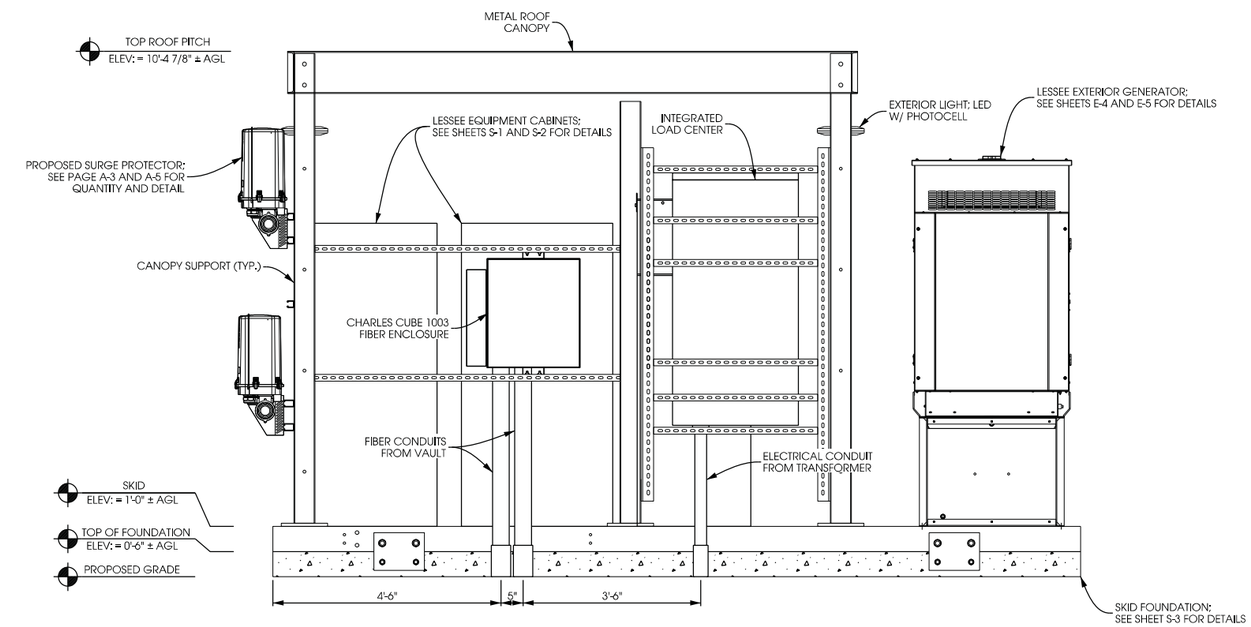

ELEVATION B

SKID NOTE:

SKID ELEVATIONS PROVIDED FOR CONVENIENCE.
SKID PROVIDED AS KIT BY FIBREBOND.
MODEL # LISTED AT BOTTOM OF PAGE

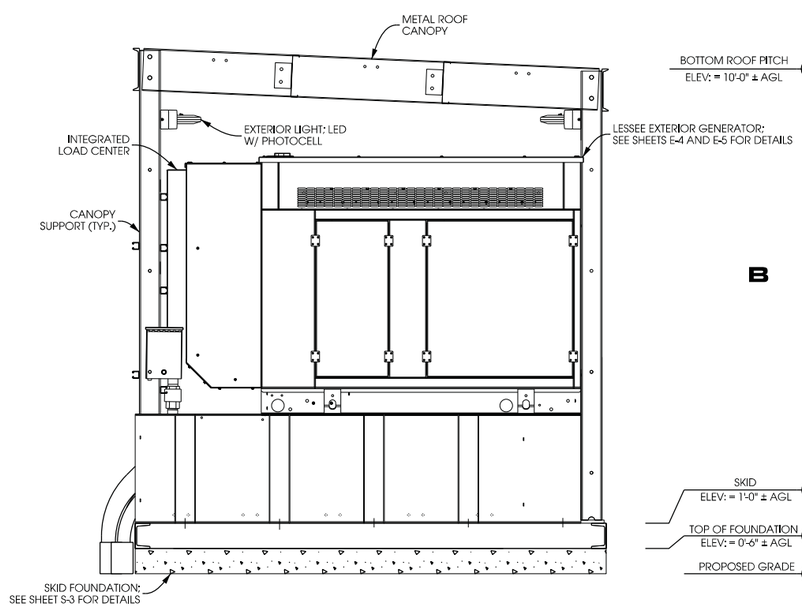

ELEVATION C

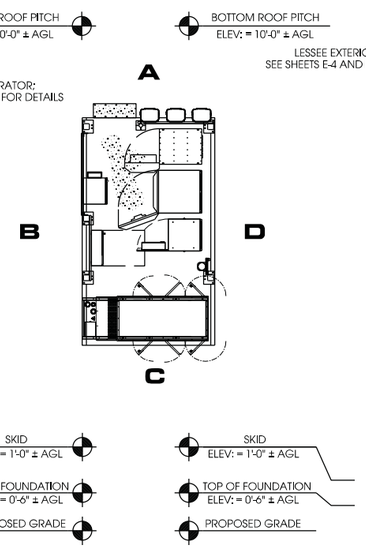

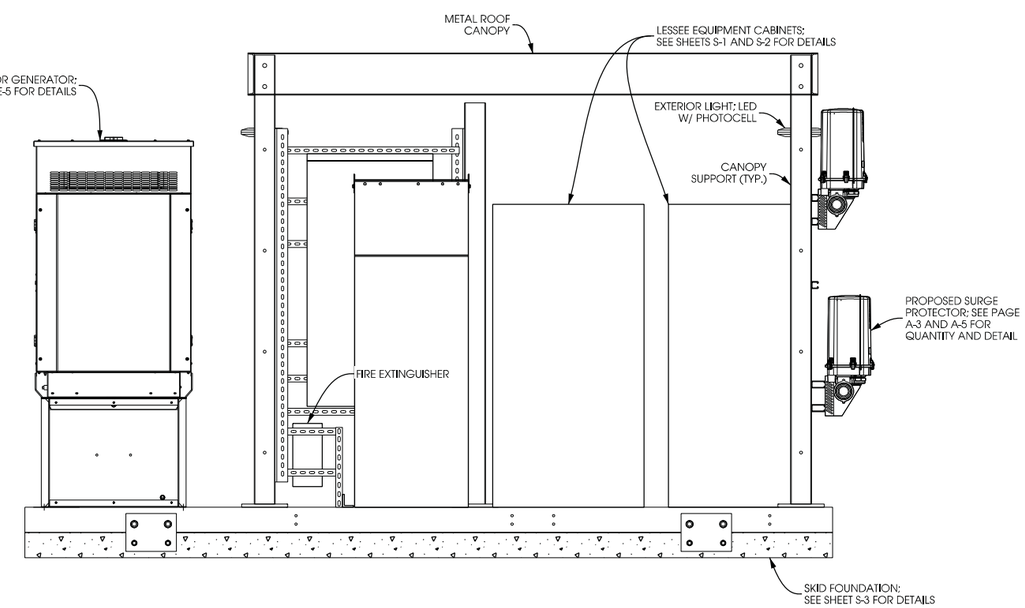

ELEVATION D

(A) **EQUIPMENT SKID ELEVATIONS**

SCALE: 11" x 17" - 1/3" = 1'-0"
22" x 34" - 2/3" = 1'-0"

FIBREBOND MODEL: VZW9.4X16-GLCS-3

Edge Consulting Engineers, Inc.
624 Water Street
Prairie du Sac, WI 53578
608.644.1449 voice
608.644.1549 fax
www.edgeconsult.com

SKID ELEVATIONS
JENNA DR [2879996]
VERONA, WISCONSIN

SHEET TITLE:

PRELIMINARY DWGS:	INT:
CD 90's V.1 - 03/31/2017	CV
STAMPED PERMIT DWGS:	
STAMPED FINAL DWGS:	
FINAL CDs V.1 - 07/12/2017	NAT

CHECKED BY: PCM
PLOT DATE: 7/12/2017
PROJECT #: 15154
FILE NAME: S-4.dgn

SHEET NUMBER:
S-4

I:\15100\15154\CAD\Pitch\CD\S-4.dgn

© EDGE CONSULTING ENGINEERS, INC.

HYBRID CABLE INFO	
QUANTITY	3
LENGTH FROM GROUND SURGE PROTECTOR TO TOWER	32'±
LENGTH FROM T.O.C. TO TOWER SURGE PROTECTOR C/L	130'±
TOTAL HYBRID CABLE LENGTH	162'±

NOTES:

1.) CONTRACTOR TO VERIFY HEIGHT AND DIRECTION OF ANTENNA WITH PROJECT MANAGER & FINAL RF DESIGN.

2.) HYBRID CABLE LENGTH NOT TO EXCEED 367'.

3.) HYBRID JUMPER CABLE LENGTH NOT TO EXCEED 30'.

4.) IF CABLING LENGTH EXCEEDS MAXIMUM ALLOWED CONTRACTOR SHALL CONTACT CLIENT AND ENGINEER TO RESOLVE PRIOR TO CONSTRUCTION.

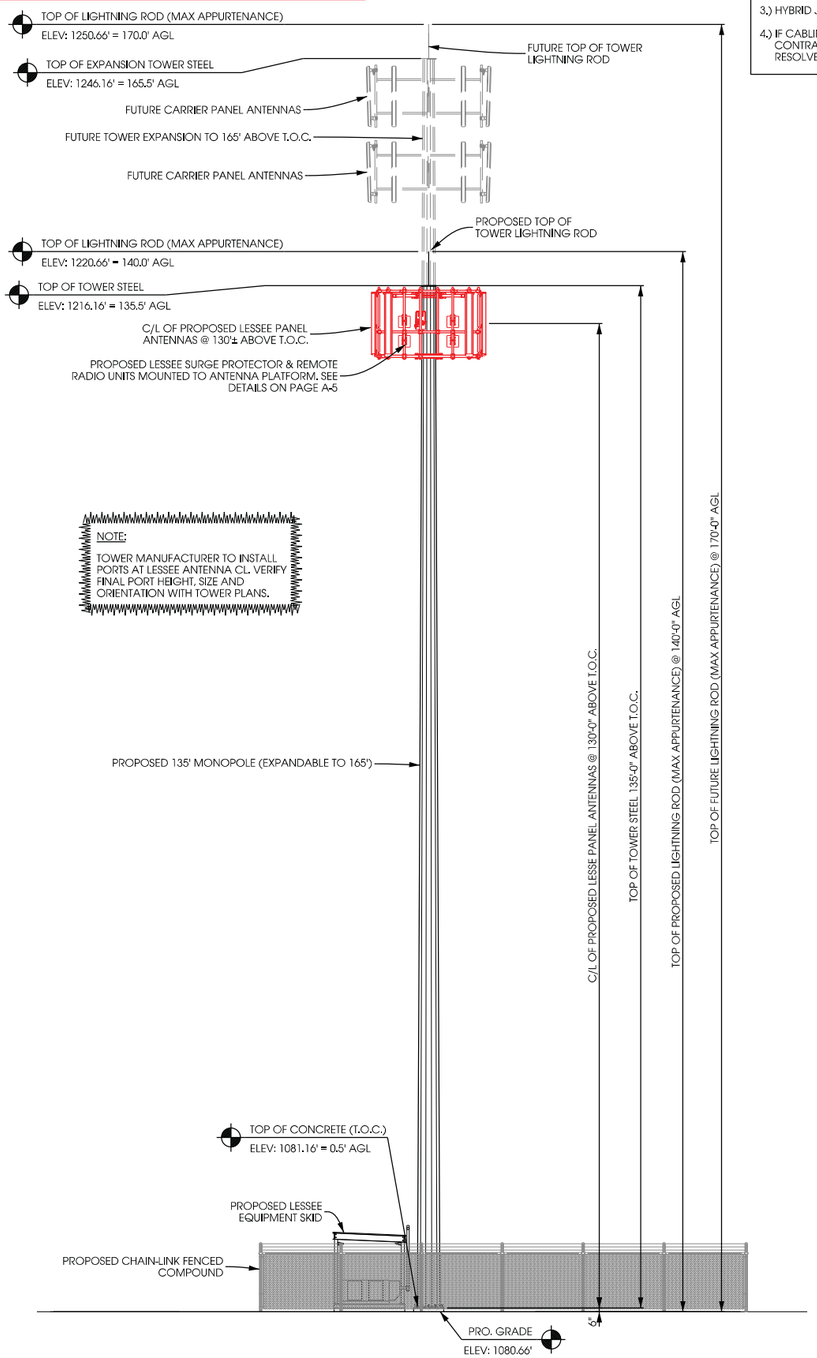

A TOWER PROFILE (SOUTH ELEVATION)

SCALE: 11" x 17" - 1" = 20'-0"
22" x 34" - 1" = 10'-0"

LEGEND:

- PROPOSED AWS/LTE PANEL ANTENNA
- PROPOSED PCS/LTE PANEL ANTENNA
- PROPOSED DISTRIBUTION SURGE PROTECTOR
- PROPOSED RRUS32 B4 REMOTE RADIO UNIT
- PROPOSED RRUS32 B2 REMOTE RADIO UNIT

NOTES:

1.) ALL ANTENNA AZIMUTHS REFERENCED FROM TRUE NORTH.

2.) SEE PAGE A-5 FOR INSTALLATION REQUIREMENTS OF ANTENNAS AND EQUIPMENT.

NORTH

NOTE:
ANTENNA PLATFORM TOP RAILING NOT SHOWN FOR CLARITY.

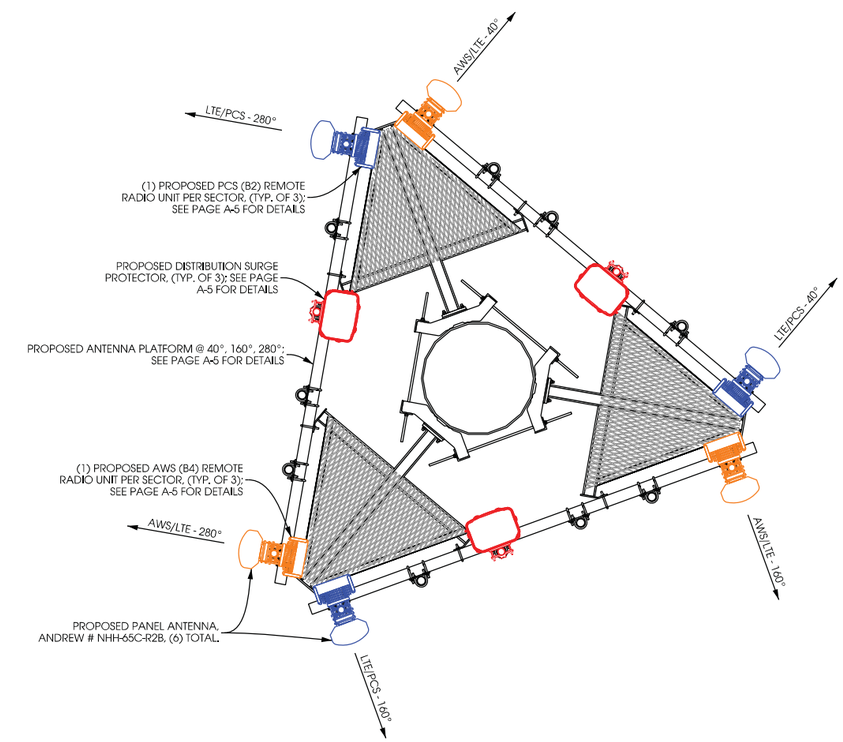

B ANTENNA & EQUIPMENT ORIENTATION

SCALE: NTS

Edge Consulting Engineers, Inc.
624 Water Street
Prairie du Sac, WI 53578
608.644.1449 voice
608.644.1549 fax
www.edgeconsult.com

TOWER ELEVATION
JENNA DR [287996]
VERONA, WISCONSIN

SHEET TITLE:

PRELIMINARY DWGS:	INI:
CD 90's V.1 - 03/31/2017	CV
STAMPED PERMIT DWGS:	
STAMPED FINAL DWGS:	
FINAL CDs V.1 - 07/12/2017	NAT

CHECKED BY: PCM
PLOT DATE: 7/12/2017
PROJECT #: 15154
FILE NAME: A-1.dgn

SHEET NUMBER:
A-1

I:\15100\15154\CAD\Plot\CD\A-1.dgn

© EDGE CONSULTING ENGINEERS, INC.

EQUIPMENT CHANGE REQUEST FORM - ECR

Cell Name	Jenna Dr			Cell ID	209727
Location Number	287996	RF Engineer	Chris Jennings	Address	2381 Zurbuchen Dr
Date of Request	3/29/2017	Market	New Berlin	City/State/Zip	Verona, WI

PROPOSED CONFIGURATION

Antenna							Equipment Layout Link			
Sector	Pos	Port	RF Path	Antenna Manufacturer	Antenna Model	Centerline	Azimuth	Variable Tilt	Mechanical Tilt	Action
Alpha	A1	H1	AWS - RxTx0	Andrew	NHH-65C-R2B	130	40	1	0	Add- Install
		H2	AWS - RxTx1							
		L1	LTE C - RxTx0					3		
		L2	LTE C - RxTx1							
		H1	AWS - RxTx2					1		
		H2	AWS - RxTx3							
	A2	H1	Unused at this time							
		H2	Unused at this time							
		L1	Unused at this time							
		L2	Unused at this time							
		H1	Unused at this time							
		H2	Unused at this time							
	A3	H1	Unused at this time							
		H2	Unused at this time							
		L1	Unused at this time							
		L2	Unused at this time							
		H1	Unused at this time							
		H2	Unused at this time							
	A4	H1	LTE PCS - RxTx0	Andrew	NHH-65C-R2B	130	40	3	0	Add- Install
		H2	LTE PCS - RxTx1							
		L1	LTE C - Rx--2					3		
		L2	LTE C - Rx--3							
		H1	LTE PCS - RxTx2					3		
		H2	LTE PCS - RxTx3							
Beta	B1	H1	AWS - RxTx0	Andrew	NHH-65C-R2B	130	160	1	0	Add- Install
		H2	AWS - RxTx1							
		L1	LTE C - RxTx0					1		
		L2	LTE C - RxTx1							
		H1	AWS - RxTx2					1		
		H2	AWS - RxTx3							
	B2	H1	Unused at this time							
		H2	Unused at this time							
		L1	Unused at this time							
		L2	Unused at this time							
		H1	Unused at this time							
		H2	Unused at this time							
	B3	H1	Unused at this time							
		H2	Unused at this time							
		L1	Unused at this time							
		L2	Unused at this time							
		H1	Unused at this time							
		H2	Unused at this time							
	B4	H1	LTE PCS - RxTx0	Andrew	NHH-65C-R2B	130	160	1	0	Add- Install
		H2	LTE PCS - RxTx1							
		L1	LTE C - Rx--2					1		
		L2	LTE C - Rx--3							
		H1	LTE PCS - RxTx2					1		
		H2	LTE PCS - RxTx3							
Gamma	G1	H1	AWS - RxTx0	Andrew	NHH-65C-R2B	130	280	1	0	Add- Install
		H2	AWS - RxTx1							
		L1	LTE C - RxTx0					1		
		L2	LTE C - RxTx1							
		H1	AWS - RxTx2					1		
		H2	AWS - RxTx3							
	G2	H1	Unused at this time							
		H2	Unused at this time							
		L1	Unused at this time							
		L2	Unused at this time							
		H1	Unused at this time							
		H2	Unused at this time							
	G3	H1	Unused at this time							
		H2	Unused at this time							
		L1	Unused at this time							
		L2	Unused at this time							
		H1	Unused at this time							
		H2	Unused at this time							
	G4	H1	LTE PCS - RxTx0	Andrew	NHH-65C-R2B	130	280	1	0	Add- Install
		H2	LTE PCS - RxTx1							
		L1	LTE C - Rx--2					1		
		L2	LTE C - Rx--3							
		H1	LTE PCS - RxTx2					1		
		H2	LTE PCS - RxTx3							

NOTES:

RF DESIGN AND DETAIL ON THIS PAGE PROVIDED BY LESSEE AND ARE INCLUDED FOR CONVENIENCE. FINAL RF DESIGN TO BE VERIFIED WITH LESSEE. IF SIGNIFICANT CHANGES OR DISCREPANCIES ARE IDENTIFIED, CONTACT ENGINEER PRIOR TO INSTALLATION.

Edge Consulting Engineers, Inc.
624 Water Street
Prairie du Sac, WI 53578
608.644.1449 voice
608.644.1549 fax
www.edgeconsult.com

SHEET TITLE:

ANTENNA CONFIGURATION
JENNA DR [287996]
VERONA, WISCONSIN

PRELIMINARY DWGS:	INI:
CD 90's V.1 - 03/31/2017	CV
STAMPED PERMIT DWGS:	
STAMPED FINAL DWGS:	
FINAL CDs V.1 - 07/12/2017	NAT

CHECKED BY: PCM

PLOT DATE: 7/12/2017

PROJECT #: 15154

FILE NAME: A-2.dgn

SHEET NUMBER: A-2

PROPOSED ANTENNA CONFIGURATION

I:\15100\15154\CAD\Plot\CD\A-2.dgn

© EDGE CONSULTING ENGINEERS, INC.

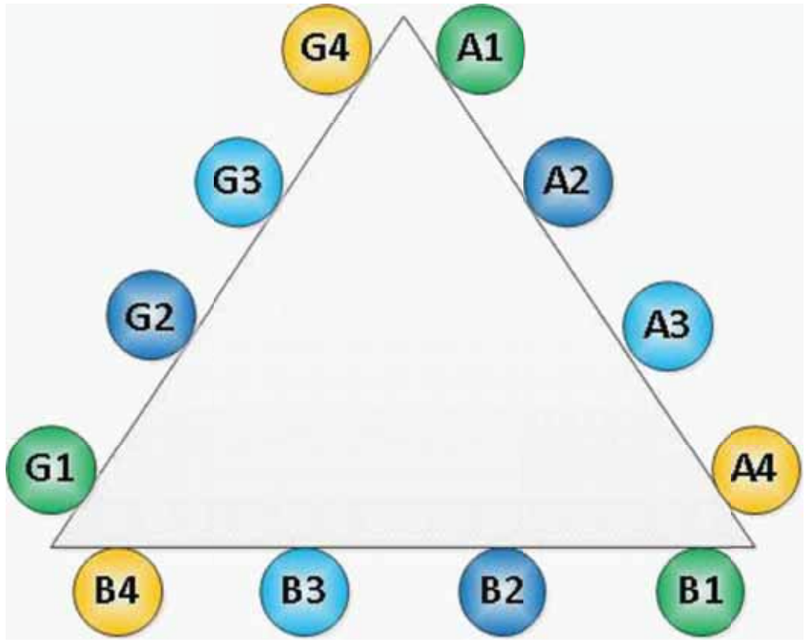

ANTENNA PLATFORM SCHEMATIC

Proposed

	Location	Manufacturer	Component Model	Count	Action
Passive Components	Top (Platform)				
	Top (Platform)				
	Top (Platform)	Ericsson	RRUS32 B2	3	Install
	Top (Platform)	Ericsson	RRUS32 B4	3	Install
	Top (Platform)				
	Top (Platform)				
	Top (Platform)	Raycap	RCMDC-3315-PF-48	3	Install
	Bottom (Shelter)	Raycap	RCMDC-3315-PF-48	3	Install
	Bottom (Shelter)				
	Bottom (Shelter)				

	Sector	Coax Manufacturer	Type	Size	Count	Action
Coax	Alpha			1 5/8	4	Install
	Beta			1 5/8	4	Install
	Gamma			1 5/8	4	Install
	Hybrid	Andrew	HFT1206-24S49	1.5	3	Install

Comments

AISG RET control is through Smart Bias-T internal to antenna.

NOTES:

RF DESIGN AND DETAIL ON THIS PAGE PROVIDED BY LESSEE AND ARE INCLUDED FOR CONVENIENCE. FINAL RF DESIGN TO BE VERIFIED WITH LESSEE. IF SIGNIFICANT CHANGES OR DISCREPANCIES ARE IDENTIFIED, CONTACT ENGINEER PRIOR TO INSTALLATION.

COMBINER CABLE DATA INFORMATION

Raycap Layout - Raycap Per Sector

POWER

3	700 RRU	6	700 RRU2/A2
2	PCSLT RRU	5	PCSLT RRU2/A2
1	AWS RRU	4	AWS RRU2/A2

FIBER

1	2	3	4	5	6
AWS RRU	AWS RRU2/A2	PCSLTE RRU	PCSLTE RRU/A2	700 RRU	700 RRU/A2
7	8	9	10	11	12

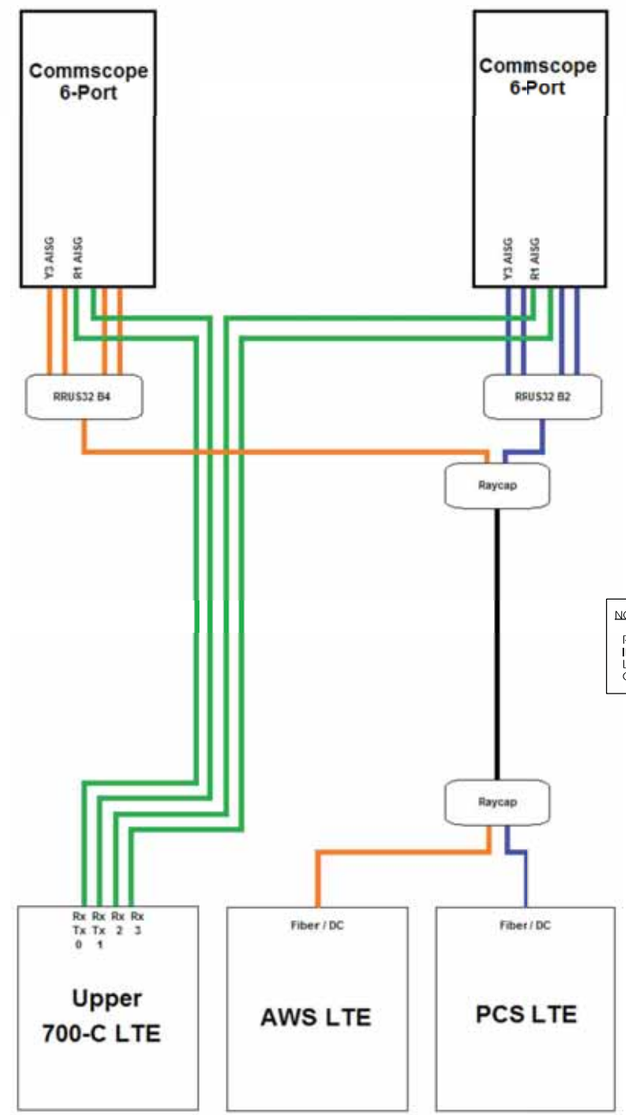

NOTES:

RF DESIGN AND DETAIL ON THIS PAGE PROVIDED BY LESSEE AND ARE INCLUDED FOR CONVENIENCE. FINAL RF DESIGN TO BE VERIFIED WITH LESSEE. IF SIGNIFICANT CHANGES OR DISCREPANCIES ARE IDENTIFIED, CONTACT ENGINEER PRIOR TO INSTALLATION.

PROPOSED ANTENNA CONFIGURATION

Edge Consulting Engineers, Inc.
624 Water Street
Prairie du Sac, WI 53578
608.644.1449 voice
608.644.1549 fax
www.edgeconsult.com

SHEET TITLE:

ANTENNA CONFIGURATION
JENNA DR [2887996]
VERONA, WISCONSIN

PRELIMINARY DWGS:	INT:
CD 90's V.1 - 03/31/2017	CV
STAMPED PERMIT DWGS:	
STAMPED FINAL DWGS:	
FINAL CDs V.1 - 07/12/2017	NAT

CHECKED BY: PCM
PLOT DATE: 7/12/2017
PROJECT #: 15154
FILE NAME: A-3.dgn

SHEET NUMBER: **A-3**

I:\15100\15154\CAD\Rich\CD\A-3.dgn

© EDGE CONSULTING ENGINEERS, INC.

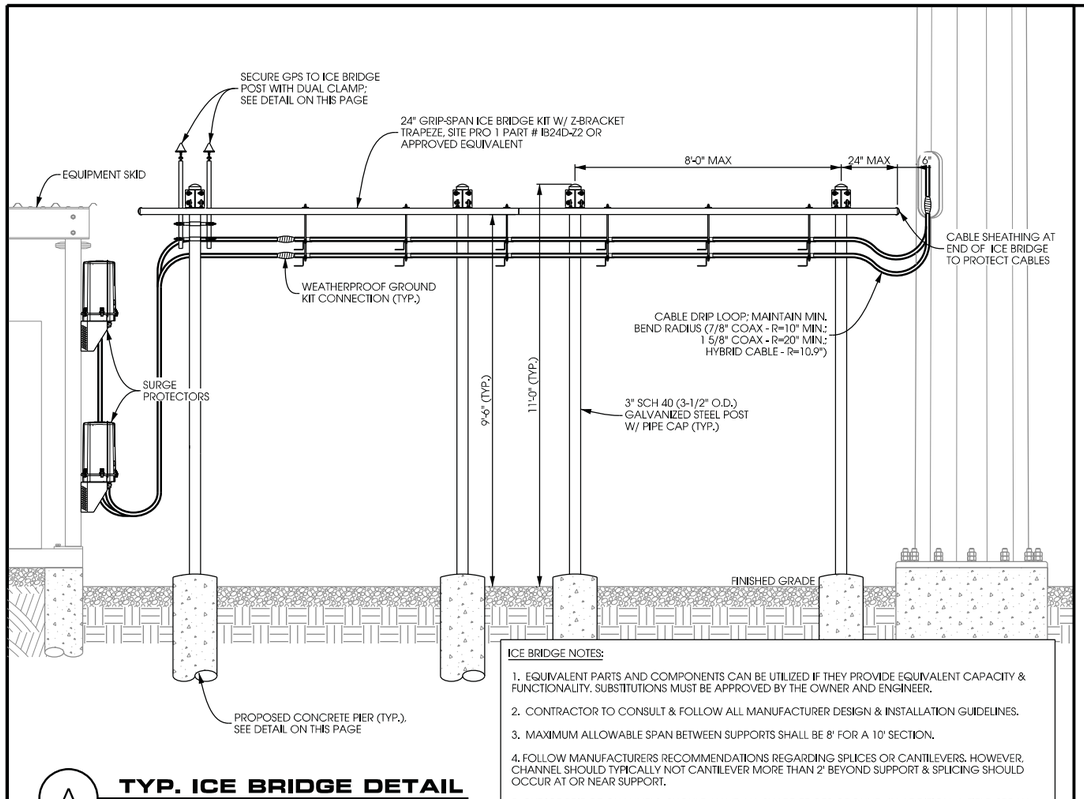

ICE BRIDGE NOTES:

1. EQUIVALENT PARTS AND COMPONENTS CAN BE UTILIZED IF THEY PROVIDE EQUIVALENT CAPACITY & FUNCTIONALITY. SUBSTITUTIONS MUST BE APPROVED BY THE OWNER AND ENGINEER.
2. CONTRACTOR TO CONSULT & FOLLOW ALL MANUFACTURER DESIGN & INSTALLATION GUIDELINES.
3. MAXIMUM ALLOWABLE SPAN BETWEEN SUPPORTS SHALL BE 8' FOR A 10' SECTION.
4. FOLLOW MANUFACTURERS RECOMMENDATIONS REGARDING SPLICES OR CANTILEVERS. HOWEVER, CHANNEL SHOULD TYPICALLY NOT CANTILEVER MORE THAN 2' BEYOND SUPPORT & SPLICING SHOULD OCCUR AT OR NEAR SUPPORT.
5. CUT ICE BRIDGE CHANNELS SHOULD HAVE ALL SHARP EDGES GROUND. IN ADDITION, A FIELD SPRAY GALVANIZING COMPOUND SHOULD BE APPLIED TO ALL EXPOSED METAL.

A TYP. ICE BRIDGE DETAIL

SCALE: NTS

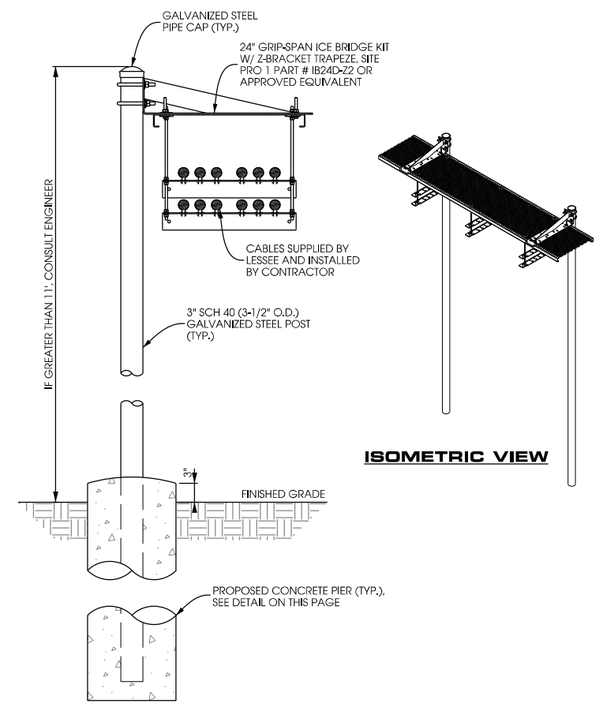

B ICE BRIDGE DETAIL

SCALE: NTS

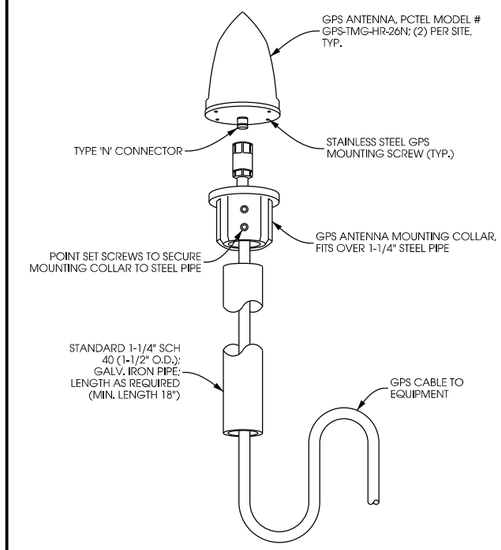

C GPS ANTENNA

SCALE: NTS

NOTES:

- ALLOWS TWO ANTENNAS TO BE SUPPORTED BY ONE PIPE
- ACCEPTS MOUNTING PIPES 1-1/2" TO 3-1/2" O.D.
- KIT INCLUDES TWO ANTENNA CLAMPS AND HARDWARE
- ANTENNA PIPE SEPARATION IS 15-1/2"
- MOUNTING PIPES ORDERED SEPARATELY

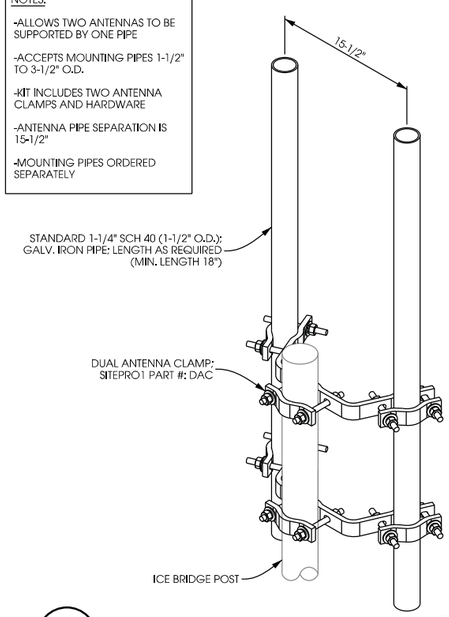

D GPS ANTENNA MOUNTING

SCALE: NTS

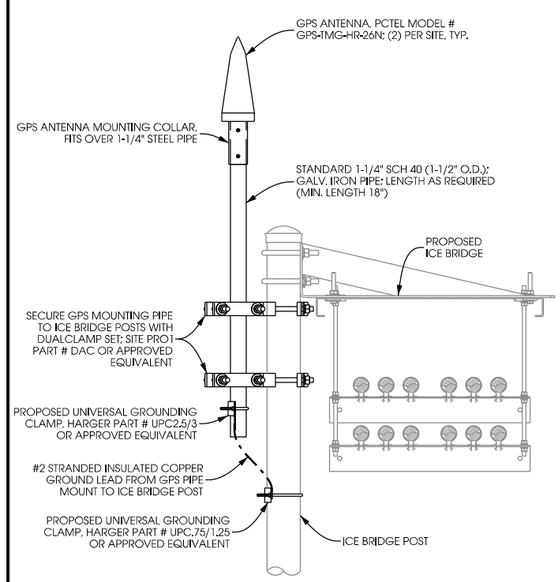

E GPS ICE BRIDGE POST MOUNT

SCALE: NTS

NOTES:

PIER REINFORCING USED FOR UTILITY RACKS AND ICE BRIDGE POSTS.

MAINTAIN 3" MINIMUM REBAR COVER IN ALL DIRECTIONS.

PIER FOUNDATION DEPTH TO BE A MINIMUM OF 48"; DEPTH TO EXCEED LOCAL FROST DEPTH.

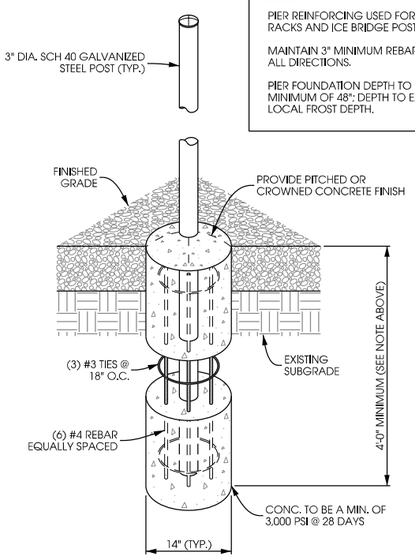

F PIER FND. DETAIL

SCALE: NTS

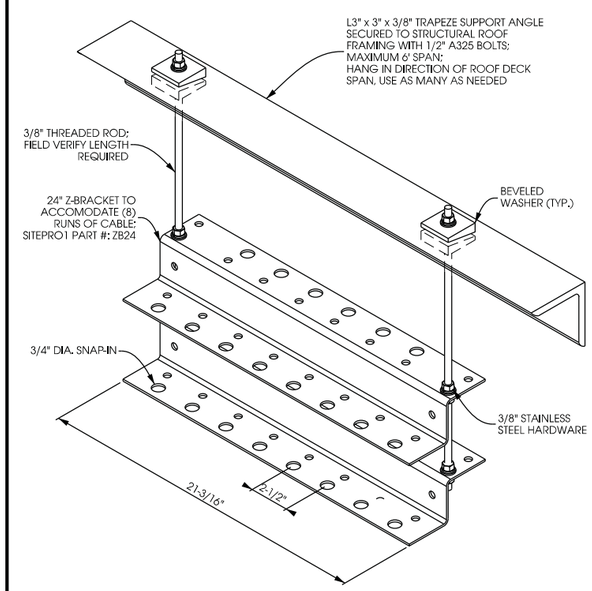

G CANOPY TRAPEZE KIT

SCALE: NTS

Edge Consulting Engineers, Inc.
624 Water Street
Prairie du Sac, WI 53578
608.644.1449 voice
608.644.1549 fax
www.edgeconsult.com

ICE BRIDGE DETAILS
JENNA DR [2887996]
VERONA, WISCONSIN

SHEET TITLE:

PRELIMINARY DWGS:	INI:
CD 90's V.1 - 03/31/2017	CV
STAMPED PERMIT DWGS:	
STAMPED FINAL DWGS:	
FINAL CDs V.1 - 07/12/2017	NAT

CHECKED BY: PCM
PLOT DATE: 7/12/2017
PROJECT #: 15154
FILE NAME: A-4.dgn
SHEET NUMBER: A-4

I:\15100\15154\CAD\Plot\CD\A-4.dgn

© EDGE CONSULTING ENGINEERS, INC.

NOTES:

CONTRACTOR TO VERIFY LIGHTNING ROD EXTENDS 2' MIN. ABOVE ALL ANTENNAS & EQUIPMENT.

CAGE DESIGN AS SHOWN CAN BE USED WITH POLE DIAMETERS 12" TO 38" AND UP TO ELEVATION OF 200'. IF SITE SPECIFIC CONDITIONS ARE OUTSIDE THESE PARAMETERS, PLEASE CONTACT ENGINEER.

NOTE:

PANEL ANTENNAS NOT DEPICTED ON FRONT FACE FOR CLARITY

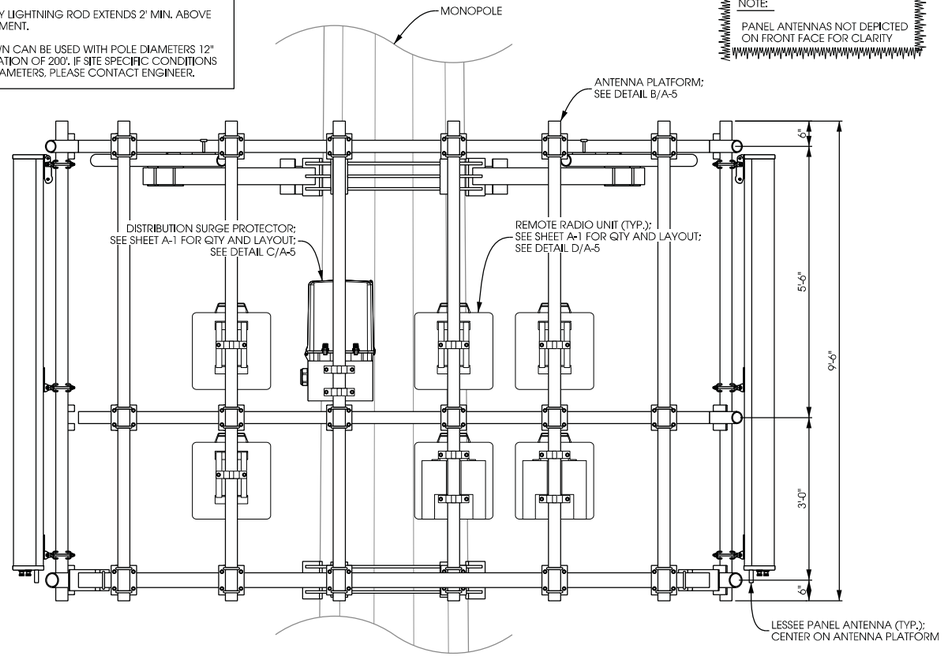

A ANTENNA & EQUIPMENT MOUNTING

SCALE: NTS

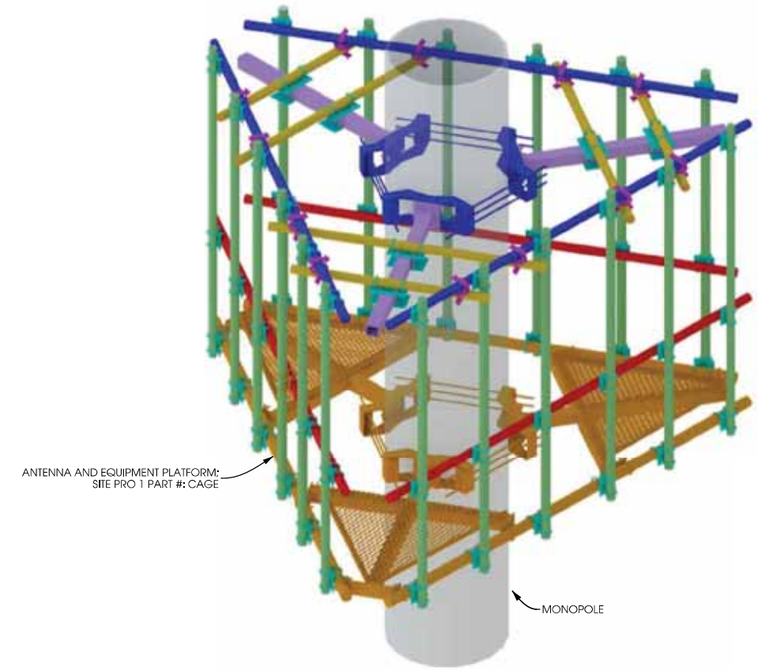

B ANTENNA PLATFORM

SCALE: NTS

DISTRIBUTION SURGE PROTECTOR:

RAYCAP PART # RCMDC-3315-PF-48

DC SURGE PROTECTION FOR RRH/INTEGRATED ANTENNA RADIO HEAD

TOWER, BASE, ROOFTOP, & ROOFTOP DISTRIBUTION MODELS

DIMENSIONS: 19.18" x 15.73" x 10.25" (H x W x D)

WEIGHT: 32 LBS (14.51 kg)

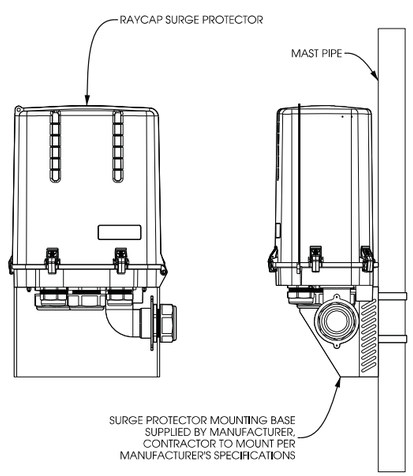

C DISTRIBUTION SURGE PROTECTOR

SCALE: NTS

REMOTE RADIO UNIT A2:

ERICSSON PART # RRUSA2 B4 (AWS)
ERICSSON PART # RRUSA2 B2 (PCS)
ERICSSON PART # RRUSA2 B13 (700)

DIMENSIONS: 16.4" x 15.1" x 3.3" (H x W x D)

WEIGHT: 22 LBS

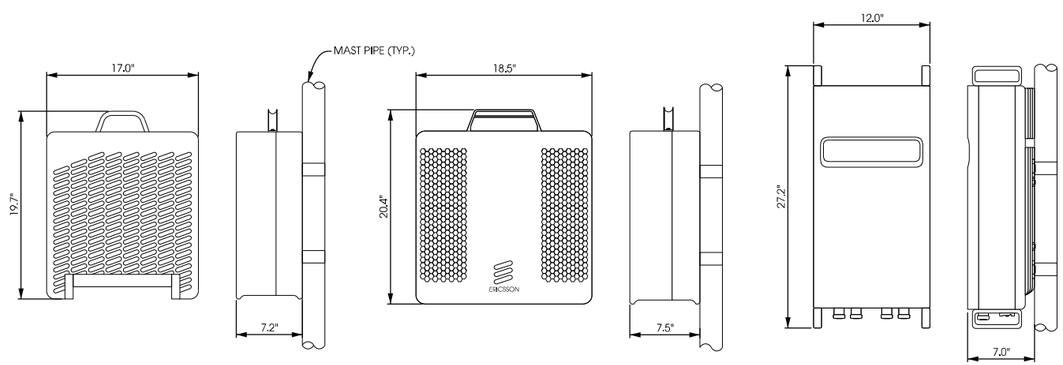

REMOTE RADIO UNIT :

ERICSSON PART # RRUS B13 (700)

DIMENSIONS: 19.7" x 17.0" x 7.2" (H x W x D)

WEIGHT: 51 LBS

REMOTE RADIO UNIT :

ERICSSON PART # RRUS12 B4 (AWS)
ERICSSON PART # RRUS12 B2 (PCS)

DIMENSIONS: 20.4" x 18.5" x 7.5" (H x W x D)

WEIGHT: 58 LBS

REMOTE RADIO UNIT :

ERICSSON PART # RRUS32 B4 (AWS)
ERICSSON PART # RRUS32 B2 (PCS)

DIMENSIONS: 27.2" x 12.0" x 7.0" (H x W x D)

WEIGHT: 60 LBS

D REMOTE RADIO UNITS

SCALE: NTS

THIS SPACE INTENTIONALLY LEFT BLANK

Edge Consulting Engineers, Inc.
624 Water Street
Prairie du Sac, WI 53578
608.644.1449 voice
608.644.1549 fax
www.edgeconsult.com

SHEET TITLE:

ANTENNA/EQUIP. MOUNTING

JENNA DR [2887996]

VERONA, WISCONSIN

PRELIMINARY DWGS:	INIT:
CD 90's V.1 - 03/31/2017	CV
STAMPED PERMIT DWGS:	
STAMPED FINAL DWGS:	
FINAL CDs V.1 - 07/12/2017	NAT

CHECKED BY: PCM

PLOT DATE: 7/12/2017

PROJECT #: 15154

FILE NAME: A-5.dgn

SHEET NUMBER: A-5

I:\15100\15154\CAD\Plot\CD\A-5.dgn

© EDGE CONSULTING ENGINEERS, INC.

SPLICE / PULL BOX NOTES:

PG STYLE POLYMER CONCRETE (STACKABLE) ASSEMBLY

FOR SPLICE BOX LOCATIONS USE 24" x 36" x 36" DEEP BOX
QUAZITE PART # PG2436BA36 OR APPROVED EQUIVALENT

FOR PULL BOX LOCATIONS USE 24" x 36" x 24" DEEP BOX
QUAZITE PART # PG2436BA24 OR APPROVED EQUIVALENT

FOR COVERS FOR BOTH SPLICE AND PULL BOX LOCATIONS
USE QUAZITE PART # PG2436KK00 OR APPROVED EQUIVALENT

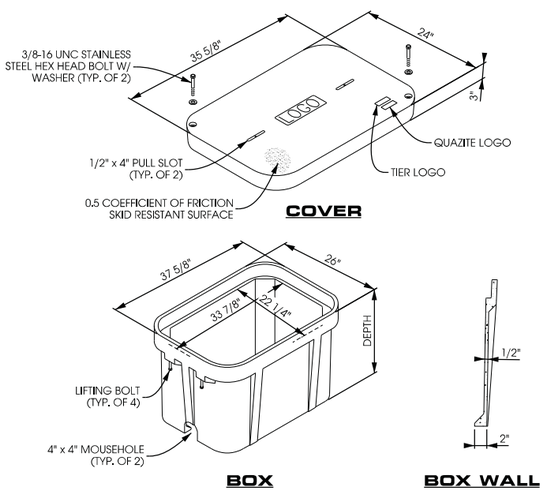

A **SPLICE/PULL BOX DETAIL**

SCALE: NTS

UTILITY PROVIDER INFO:

ELECTRIC PROVIDER:	ALLIANT ENERGY
CONTACT:	JEFF NELSON
PHONE:	608.845.1148
EMAIL:	jeffnelson@alliantenergy.com
WORK ORDER #:	TBD
FIBER OPTIC PROVIDER:	TBD
CONTACT:	
PHONE:	
MOBILE:	
EMAIL:	
WORK ORDER #:	

POWER NOTE:

ALLIANT IS TO ROUTE POWER FROM THE EXISTING POWER POLE LOCATED ON THE EAST SIDE OF SPRING ROSE. POWER WILL RUN UNDERNEATH THE ROAD AND ALONG THE NORTH SIDE OF THE PROPOSED GRAVEL ACCESS DRIVE TO THE PROPOSED TRANSFORMER LOCATION. TRANSFORMER WILL BE FURNISHED AND INSTALLED BY ALLIANT. NOTE: ALLIANT WILL NOT ROUTE POWER UNTIL ROUGH GRADING IS COMPLETE. THIS IS ESPECIALLY IMPORTANT FOR THE TRANSFORMER LOCATION SINCE THERE IS CURRENTLY OLD FOUNDATION WALL STILL IN THE GROUND.

CST'S CONTRACTOR IS TO FURNISH AND INSTALL CONDUIT BETWEEN THE PROPOSED TRANSFORMER AND UTILITY RACK, ALONG WITH THE 4-GANG MULTI-METER PACK. ONCE CONDUIT IS INSTALLED ALLIANT WILL RUN WIRE FROM THE TRANSFORMER TO THE METER. CST CONTRACTOR MUST CONTACT MR. NELSON PRIOR TO CONSTRUCTION FOR METERING LOCATION AND EQUIPMENT SPECIFICATIONS.

LESSEE'S CONTRACTOR IS TO FURNISH AND INSTALL CONDUIT AND CONDUCTORS SUITABLE FOR 200A SERVICE BETWEEN THE METER PACK AND EQUIPMENT SKID. THE CONDUIT SHALL BE NO SMALLER THAN 3" DIAMETER BURIED TO A MINIMUM DEPTH OF 42". CONDUIT SHALL BE SCH. 40 PVC WHERE UNDERGROUND AND SCH. 80 WHERE ABOVE GROUND. SLIP-JOINTS SHALL BE INSTALLED AT THE BOTTOM OF THE METER PACK AND EQUIPMENT SKID. AT LEAST (1) PULL ROPE IS TO REMAIN IN THE CONDUIT BETWEEN THE METER PACK AND EQUIPMENT SKID ONCE WORK IS COMPLETE. LESSEE'S CONTRACTOR IS TO HANDLE ALL CONNECTIONS OF CONDUCTORS AT THE LOAD SIDE OF THE METER PACK AND EQUIPMENT SKID.

NOTE:

FIBER COORDINATION IS NOT COMPLETE (PENDING FIBER CONTACT). PRIOR TO CONSTRUCTION, CONTACT DESIGNER FOR UPDATE.

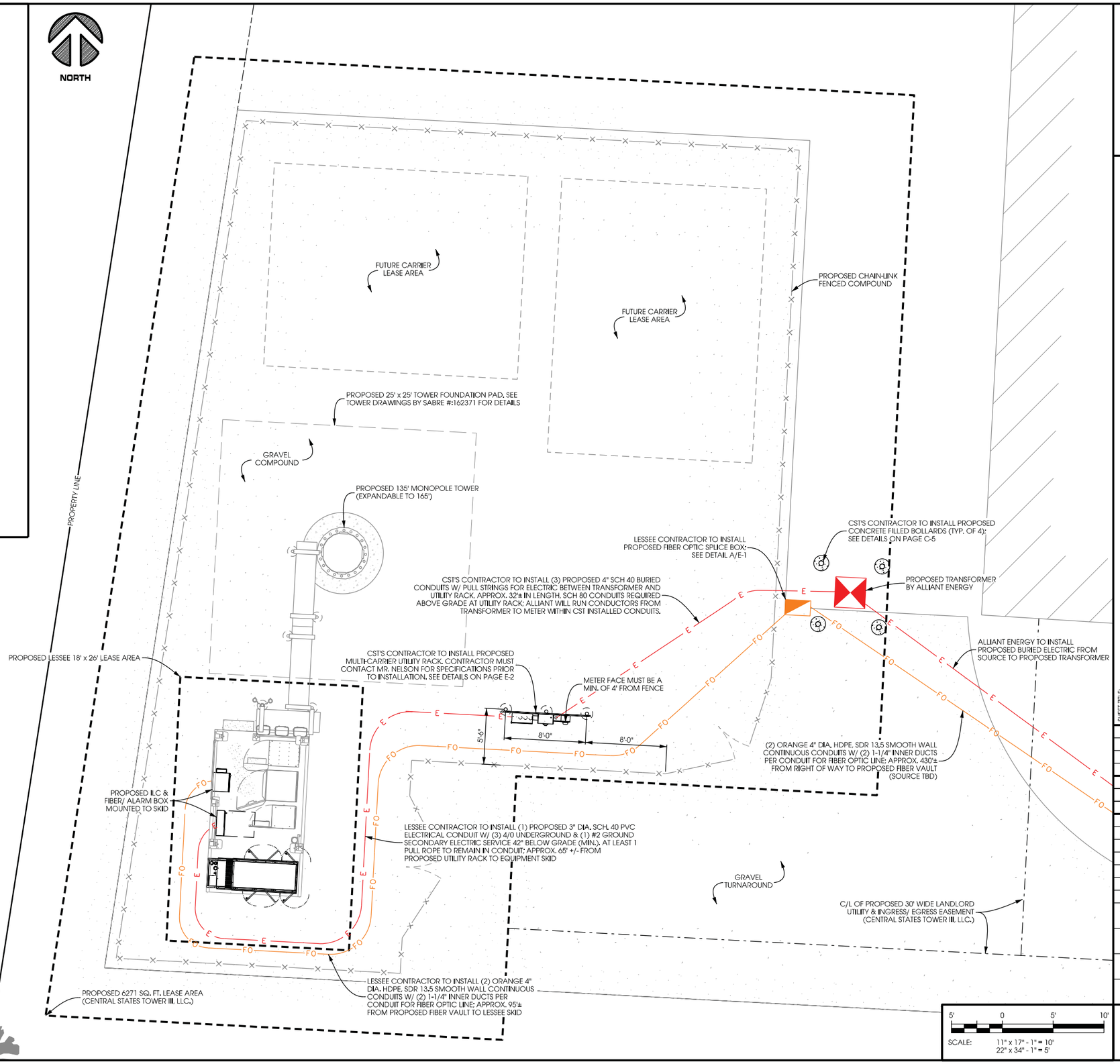

5' 0 5' 10'

SCALE: 11" x 17" - 1" = 10'
22" x 34" - 1" = 5'

Edge Consulting Engineers, Inc.
624 Water Street
Prairie du Sac, WI 53578
608.644.1449 voice
608.644.1549 fax
www.edgeconsult.com

UTILITY PLAN
JENNA DR [287996]
VERONA, WISCONSIN

SHEET TITLE:

PRELIMINARY DWGS:	INIT.
CD 90's V.1 - 03/31/2017	CV
STAMPED PERMIT DWGS:	
STAMPED FINAL DWGS:	
FINAL CDs V.1 - 07/12/2017	NAT

CHECKED BY: PCM
PLOT DATE: 7/12/2017
PROJECT #: 15154
FILE NAME: E-1.dgn

SHEET NUMBER: **E-1**

I:\15100\15154\CAD\Plot\CD\E-1.dgn

© EDGE CONSULTING ENGINEERS, INC.

NOTE:

1. EXTEND SERVICE LATERAL CONDUITS UNDERGROUND BEYOND FENCELINE. CAP ENDS (NO DUCT TAPE ALLOWED) AND STAKE EQUIPMENT WITH PULL CORD.
2. SQD E7 METER PACK 600 AMP, 120/240 VAC 1 PHASE, 3 WIRE OR APPROVED EQUIVALENT.
3. AT MULTI GANGED METER INSTALLATIONS ROUTE A 3/0 GREEN THWN STRANDED COPPER CONDUCTER FROM THE N-G CONNECTION POINT TO JUST ABOVE THE EARTH SURFACE. THIS CONDUCTOR SHALL BE ROUTED THROUGH PVC ABOVE FINISHED GRADE AND TO A MIN. DEPTH OF 24" INTO THE EARTH TO AVOID THEFT AND BONDED TO AN APPROVED DRIVEN GROUND ROD.

CABINET MOUNT NOTE:

- ATTACH CABINETS W/ SPRING LOADED WASHERS TO UNISTRUTS

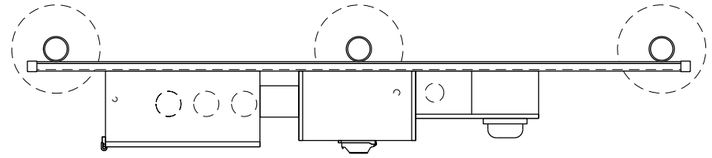

ALLIANT ENERGY REQUIREMENTS:

- CENTERLINE OF THE BOTTOM METER TO BE 30" FROM THE GROUND
- CENTERLINE OF TOP METER NOT TO EXCEED 6' FROM THE GROUND
- THE METERS MUST BE CLEARLY AND PERMANENTLY LABELED WITH ENGRAVED TAGS (NO MARKERS OR STICKERS) TO BE DESIGNATED AS FOLLOWS, IN ORDER FROM TOP TO BOTTOM, STARTING WITH THE FIRST SOCKET COLUMN ON THE LEFT: "A, B, C, D," ETC.; WHEN A METER SOCKET BECOMES OCCUPIED, AN ADDITIONAL ENGRAVED TAG BEARING THE NAME OF SERVICE OWNER IS TO BE ADDED; IN CASES WHERE THE TOWER HAS OBSTRUCTION LIGHTING, THE TOWER OWNER WILL OCCUPY THE FIRT METER SOCKET (SOCKET "A"). COLLOCATING WIRELESS CARRIERS ARE TO OCCUPY THE NEXT SUCCESSIVE METER SOCKETS
- ELECTRICIAN TO HAVE THEIR WORK PROPERLY INSPECTED AND THE RESULTS FURNISHED TO ALLIANT PRIOR TO REQUESTING ELECTRIC METERS BEING SET.
- ELECTRICIAN TO CALL 1-800-ALLIANT (1-800-255-4268) TO REQUEST ELECTRIC METER(S) TO BE SET AND SERVICE STARTED IN THE CLIENT'S NAME
- EITHER A TAYHOPE TYPE LOCK OR DAISY CHAIN MUST BE USED TO ALLOW ALLIANT ACCESS TO THE METER RACK
- ELECTRICIAN MUST TAKE CONDUIT TO THE TRANSFORMER

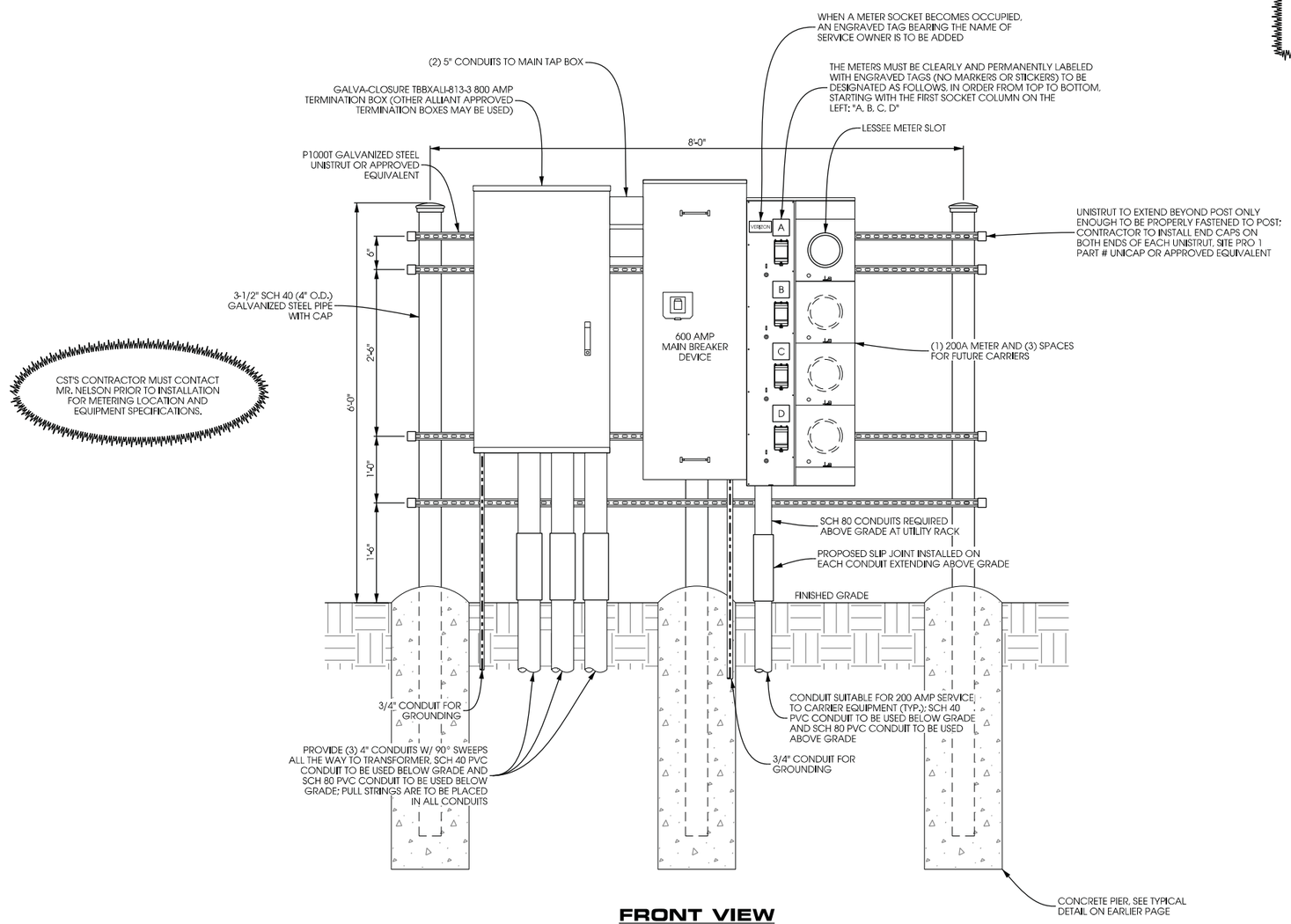

CST'S CONTRACTOR MUST CONTACT MR. NELSON PRIOR TO INSTALLATION FOR METERING LOCATION AND EQUIPMENT SPECIFICATIONS.

FRONT VIEW

(A) MULTI-METER UTILITY RACK

SCALE: 11" x 17" - 1/2" = 1'-0"
22" x 34" - 1" = 1'-0"

Edge Consulting Engineers, Inc.
624 Water Street
Prairie du Sac, WI 53578
608.644.1449 voice
608.644.1549 fax
www.edgeconsult.com

SHEET TITLE:

METER AND TELCO RACK
JENNA DR [2887996]
VERONA, WISCONSIN

PRELIMINARY DWGS:	INT:
CD 90's V.1 - 03/31/2017	CV
STAMPED PERMIT DWGS:	
STAMPED FINAL DWGS:	
FINAL CDs V.1 - 07/12/2017	NAT

CHECKED BY: PCM
PLOT DATE: 7/12/2017
PROJECT #: 15154
FILE NAME: E-2.dgn

SHEET NUMBER: **E-2**

I:\15100\15154\CAD\Plot\CD\E-2.dgn

© EDGE CONSULTING ENGINEERS, INC.

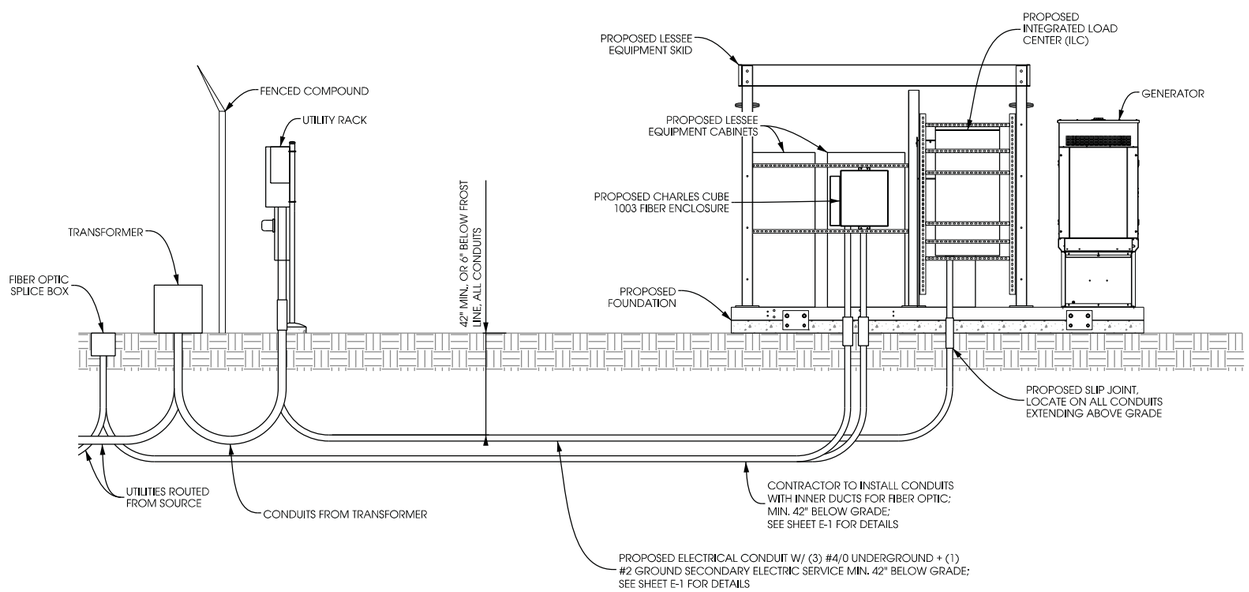

A ELECTRICAL RISER DETAIL (TYPICAL)

SCALE: NTS

NOTES:

UTILITY CONDUITS TO BE BURIED A MINIMUM DEPTH OF 42" BELOW GROUND LEVEL OR 6" BELOW THE FROST LINE.

CONDUIT TYPE, SIZE, AND QUANTITY SHOWN ON PAGE E-1.

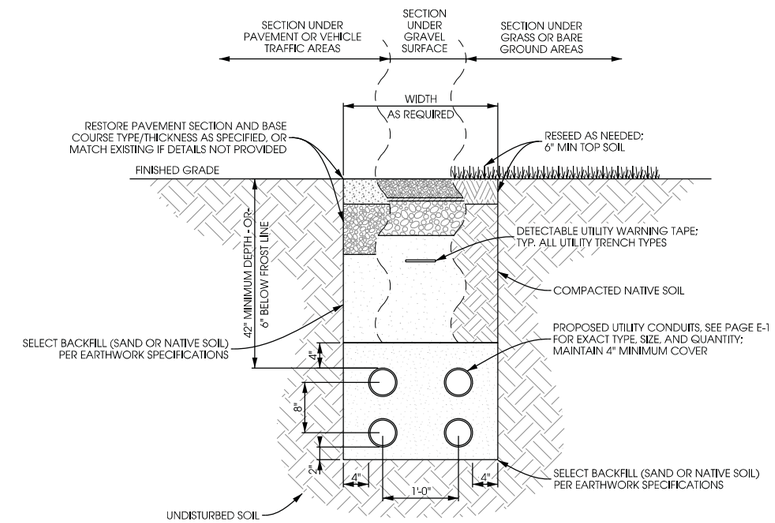

B UTILITY TRENCH DETAIL

SCALE: NTS

IF LESSEE SERVICE IS METERED AT A MULTI-METER GANG OR IF SERVICE IS PULLED FROM AN EXISTING BUILDING, DO NOT GROUND NEUTRAL TERMINAL TO EARTH GROUND AND DISCONNECT CONNECTION BETWEEN GROUND & NEUTRAL

NOTE:

STANDARD DIAGRAM PROVIDED BY CLIENT, INCLUDED HERE FOR CONVENIENCE.

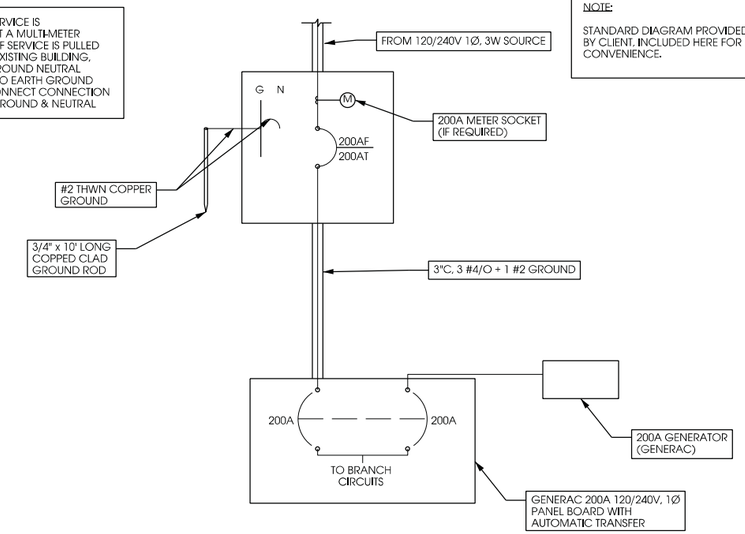

C ELECTRIC LINE DIAGRAM & NOTES

SCALE: NTS

Edge Consulting Engineers, Inc.
624 Water Street
Prairie du Sac, WI 53578
608.644.1449 voice
608.644.1549 fax
www.edgeconsult.com

UTILITY DETAILS
JENNA DR [2887996]
VERONA, WISCONSIN

SHEET TITLE:

PRELIMINARY DWGS:	INI:
CD 90's V.1 - 03/31/2017	CV
STAMPED PERMIT DWGS:	
STAMPED FINAL DWGS:	
FINAL CDs V.1 - 07/12/2017	NAT

CHECKED BY: PCM

PLOT DATE: 7/12/2017

PROJECT #: 15154

FILE NAME: E-3.dgn

SHEET NUMBER: E-3

L:\15100\15154\CAD\Plot\CD\E-3.dgn

© EDGE CONSULTING ENGINEERS, INC.

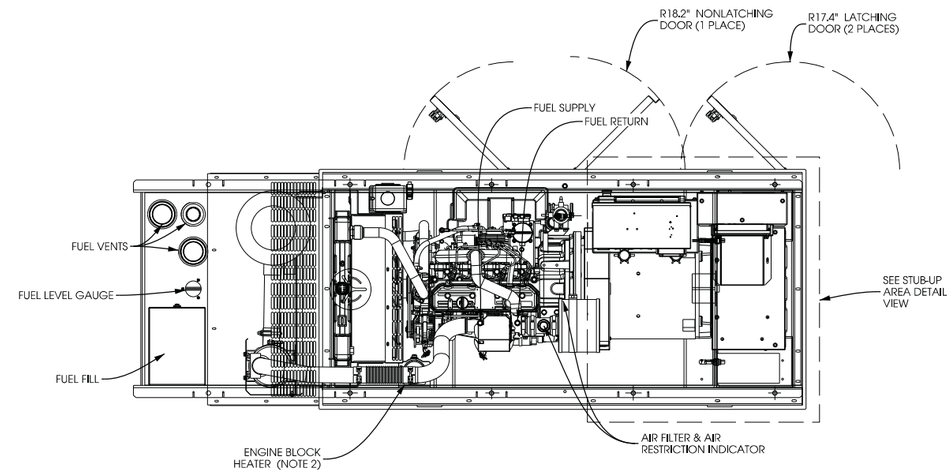

TOP OR PLAN VIEW

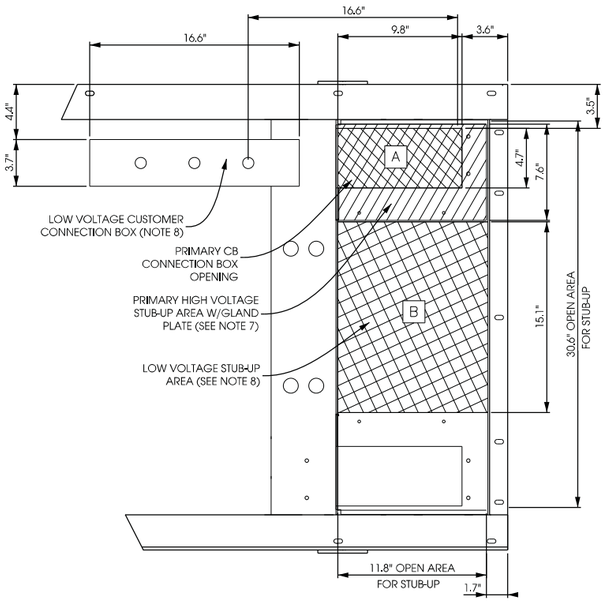

STUB-UP AREA DETAILED VIEW

NOTES:

1. CONTROL PANEL INCLUDES BATTERY CHARGER WITH THREE PRONG CORD.
2. 1500W 120VAC ENGINE BLOCK HEATER WITH THREE PRONG CORD.
3. 12 VOLT NEGATIVE GROUND SYSTEM.
4. GENERATOR MUST BE GROUNDED.
5. CENTER OF GRAVITY AND WEIGHT MAY SHIFT SLIGHTLY DUE TO UNIT OPTIONS.
6. STUB-UPS: BASE TANK REQUIRES ALL STUB-UPS TO BE IN THE REAR TANK STUB-UP AREA.
7. HIGH VOLTAGE STUB-UP AREA INCLUDES THE AC LOAD LEAD CONNECTION TO THE MAIN LINE CIRCUIT BREAKER (MLCB), THE NEUTRAL CONNECTION, AND AUXILIARY 120/240V CONNECTION.
8. CONNECTION POINTS FOR CONTROL WIRES. BOTTOM OF LOW VOLTAGE CUSTOMER CONNECTION BOX HAS KNOCKOUTS FOR 1/2" AND 3/4" CONDUIT FITTINGS.
9. MUST ALLOW FREE FLOW OF DISCHARGE AIR AND EXHAUST. SEE SPEC SHEET FOR MINIMUM AIR FLOW AND MAXIMUM RESTRICTION REQUIREMENTS.
10. MUST ALLOW FREE FLOW OF INTAKE AIR. SEE SPEC SHEET FOR MINIMUM AIR FLOW AND MAXIMUM RESTRICTION REQUIREMENTS.
11. ENCLOSED SETS - GENERATOR SET MUST BE INSTALLED SUCH THAT DISCHARGE AIR IS NOT RECIRCULATED.
12. IT IS THE RESPONSIBILITY OF THE INSTALLATION TECHNICIAN TO ENSURE THAT THE GENERATOR INSTALLATION COMPLIES WITH ALL APPLICABLE CODES, STANDARDS, AND REGULATIONS.
13. 132 GALLON USEABLE CAPACITY BASETANK IS INCLUDED WITH GENERATOR.
14. UNIT IS SHIPPED WITH FUEL SUPPLY AND RETURN LINES DISCONNECTED AND PLUGGED BETWEEN ENGINE AND FUEL TANK. THIS HAS BEEN DONE TO FACILITATE PRESSURE TESTING OF THE TANK IN THE FIELD. FOR INFORMATION REGARDING CONNECTING THE FUEL SUPPLY AND RETURN LINES PRIOR TO START UP, SEE THE FUEL TANK FIELD TESTING PROCEDURE (0E5082) SUPPLIED IN THE TANK LOOSE VENTS KIT, WHICH IS SHIPPED WITH THIS GENERATOR.
15. SEE DRAWING DC3850 FOR DUCT REMOVAL. REMOVAL OF FRONT DUCT WILL PROVIDE ACCESS TO MUFFLER FOR SERVICING.

RECOMMENDED ELECTRICAL STUB-UPS
(SEE DETAILED VIEW & TOP VIEW)

DESCRIPTION	INSIDE BASE
HIGH VOLTAGE STUB-UP AREA 1) AC LOAD LEAD CONDUIT AREA. 2) 120/240 VAC FROM UTILITY FOR OPTIONAL LOADS SUCH AS GFCI OUTLET, BLOCK HEATER, BATTERY CHARGER, AND OTHER 120/240 VAC OPTIONS. (GLAND PLATE INCLUDED)	A
LOW VOLTAGE STUB-UP AREA 1) TRANSFER SWITCH/COMMUNICATION CONDUITS. COMMUNICATIONS AND 2-WIRE START MUST NOT BE RUN IN CONDUIT WITH AC WIRING. (SEE NOTE 8)	B

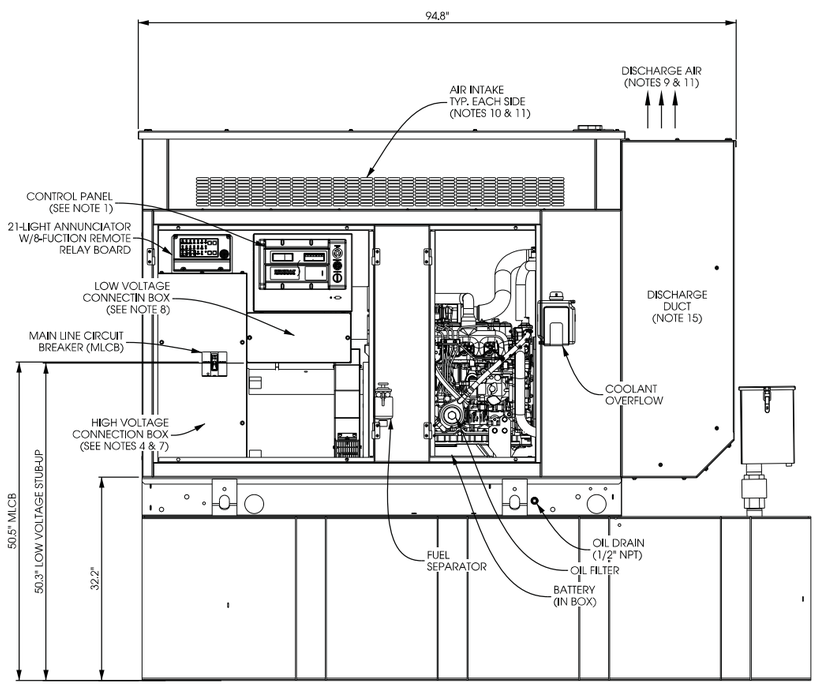

RIGHT SIDE VIEW

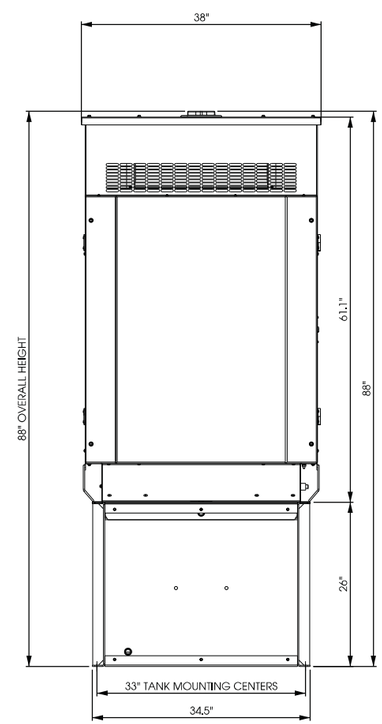

REAR VIEW

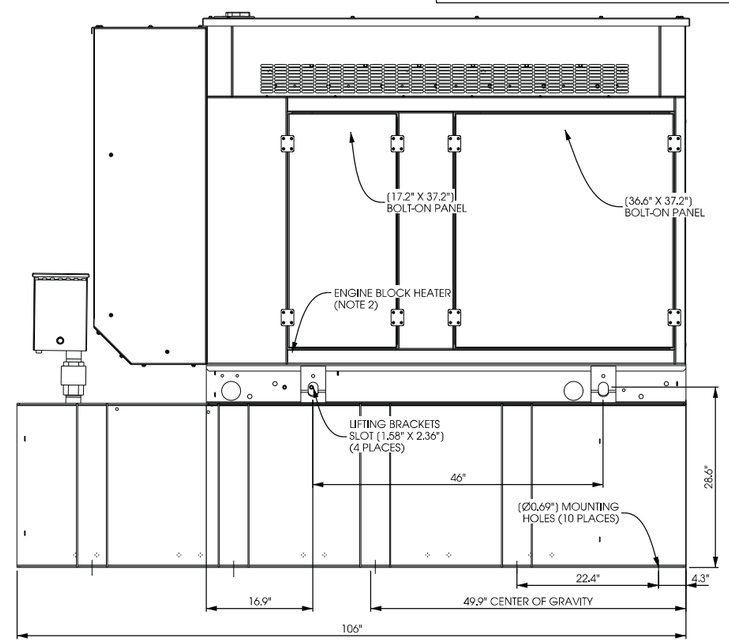

LEFT SIDE VIEW

(A) GENERAC DIESEL GENERATOR MODEL SD030

SCALE: NTS

GENERAC MODEL: 6671-WI/ILTANK

WEIGHT DATA (INCLUDES EMPTY FUEL TANK):
GENERATOR: 3,105 LBS

Edge
Consulting Engineers, Inc.
624 Water Street
Prairie du Sac, WI 53578
608.644.1449 voice
608.644.1549 fax
www.edgeconsult.com

GENERATOR DETAILS
JENNA DR [2887996]
VERONA, WISCONSIN

SHEET TITLE:

PRELIMINARY DWGS:	INI:
CD 90's V.1 - 03/31/2017	CV
STAMPED PERMIT DWGS:	
STAMPED FINAL DWGS:	
FINAL CDs V.1 - 07/12/2017	NAT

CHECKED BY: PCM
PLOT DATE: 7/12/2017
PROJECT #: 15154
FILE NAME: E-4.dgn

SHEET NUMBER:
E-4

I:\15100\15154\CAD\Plot\CD\E-4.dgn

© EDGE CONSULTING ENGINEERS, INC.

NOTE:

STANDARD DIAGRAM PROVIDED BY CLIENT, INCLUDED HERE FOR CONVENIENCE.

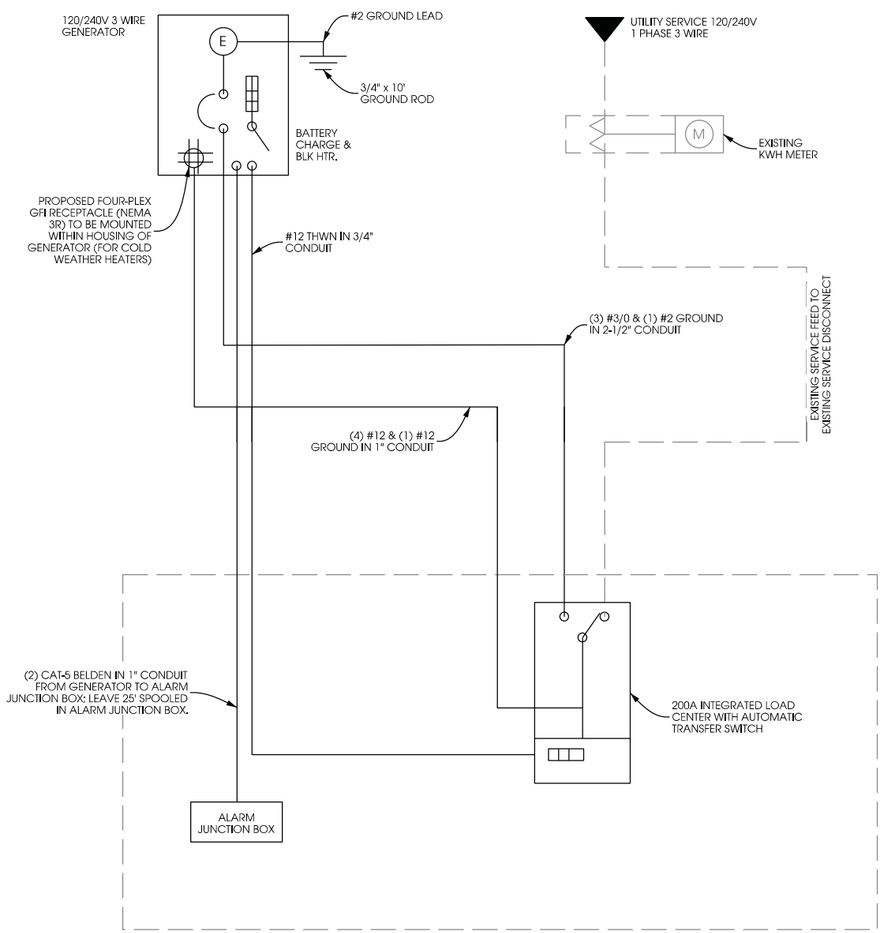

A GENERATOR SINGLE LINE DIAGRAM

SCALE: NTS

NOTES:

1. ELECTRICAL CONTRACTOR TO PULL (1) #16 AWG SOLID RED AND (1) #16 AWG SOLID BLACK FROM THE TRANSFER SWITCH TO ALARM WIRING BLOCK FOR REMOTE START.

2. ELECTRICAL CONTRACTOR TO PULL ALL ALARM LEADS TO EXISTING ALARM WIRING BLOCK. LEAVE A MINIMUM OF 24" PIGTAILS AT ALARM WIRING BLOCK AND TAG CONDUCTORS AS INDICATED. TERMINATIONS ON ALARM POINT WIRING BLOCK BY OTHERS. CONDUCTORS CAN BE RUN EXPOSED. THEY SHALL BE BUNDLED NEATLY USING TIES AND SUPPORTED AT 24" INTERVALS FOR NEAT INSTALLATION.

NOTE:

STANDARD DIAGRAM PROVIDED BY CLIENT, INCLUDED HERE FOR CONVENIENCE.

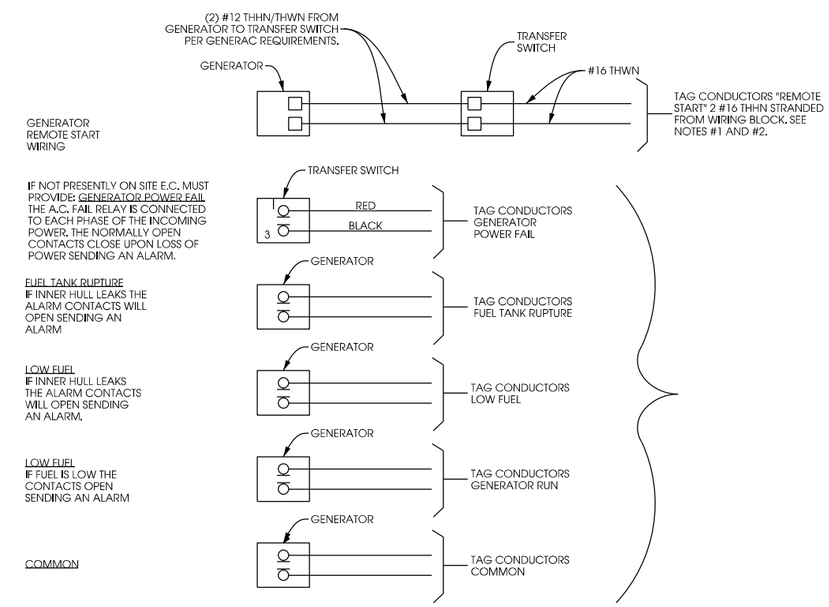

B GENERATOR ALARM WIRING

SCALE: NTS

Edge
Consulting Engineers, Inc.
624 Water Street
Prairie du Sac, WI 53578
608.644.1449 voice
608.644.1549 fax
www.edgeconsult.com

GENERATOR DETAILS
JENNA DR [2887996]
VERONA, WISCONSIN

SHEET TITLE:

PRELIMINARY DWGS:	INT:
CD 90's V.1 - 03/31/2017	CV
STAMPED PERMIT DWGS:	
STAMPED FINAL DWGS:	
FINAL CDs V.1 - 07/12/2017	NAT

CHECKED BY: PCM
PLOT DATE: 7/12/2017
PROJECT #: 15154
FILE NAME: E-5.dgn
SHEET NUMBER: E-5

I:\15100\15154\CAD\Plot\CD\E-5.dgn

© EDGE CONSULTING ENGINEERS, INC.

LEGEND

- INSPECTION WELL
- 5/8" DIA. x 10'-0" LONG, STEEL CLAD W/ A PURE COPPER JACKET (10' MAX SEPARATION)
- EXOTHERMIC CONNECTION (CADWELD OR EQUIVALENT)
- MECHANICAL CONNECTION (BURNDY OR EQUIVALENT)
- GROUND LEAD
- 18" X 18" X .032" THK COPPER PLATE (10' MAX SEPARATION)

KEYED GROUNDING NOTES:

1. EQUIPMENT SKID GROUND RING, #2 SOLID BARE-TINNED COPPER GROUND LEAD MIN. 4'-6" BURY (TYP.)OR 6" BELOW FROST WHICH EVER IS GREATER. GROUND RODS SPACED @ 8' O.C.
2. MAINTAIN 2-FOOT CLEARANCE FROM ALL STRUCTURES
3. GROUND ICE BRIDGE POSTS WITH #2 SOLID BARE TINNED COPPER LEADS
4. 4" x 20" x 1/4" COPPER GROUND BAR FOR CABLE GROUND KITS, NONISOLATED WITH (2) #2 SOLID BARE TINNED COPPER GROUND LEADS TO GROUND RING
5. GROUND CABLES TO GROUND BAR AT ANTENNA ELEVATION. GROUND ANTENNA GROUND BAR TO TOWER STEEL
6. 5/8" DIAMETER x 10'-0" LONG COPPER CLAD GROUND ROD WITH EXOTHERMIC CONNECTION, 8' SPACING, TYP.
7. BOND TOWER GROUND RING TO THE PROPOSED EQUIPMENT GROUND RING WITH (2) #2 SOLID BARE TINNED COPPER GROUND LEADS, EXOTHERMIC CONNECTION
8. TOWER GROUND RING
9. FIBER OPTIC HAND HOLE
10. 4" x 12" x 1/4" GROUND BAR INSIDE HAND HOLE; CONTRACTOR TO DRIVE 10' GROUND ROD & CLAMP TO GROUND BAR
11. GATE GROUND LEAD, #2 SOLID BARE TINNED COPPER GROUND LEADS TO GATE POST, & BRAIDED STRAP CONNECTION FROM POST TO GATE
12. GROUND ELECTRIC METER TO (2) INDEPENDENT GROUND RODS, SPACED 10' O.C. WITH #2 SOLID BARE TINNED COPPER
13. GROUND MULTI-METER CABINETS
14. PERIPHERAL GROUND RING SHOULD BE INSTALLED 1' TO 2' INSIDE THE FENCED LINE; THE TOWER GROUND RING SHOULD BE INSTALLED A MINIMUM OF 2' OFF ANY STRUCTURE
15. FENCE CORNER GROUND LEAD, #2 SOLID BARE TINNED COPPER, CADWELD CONNECTION. GROUND FENCE POSTS WITHIN 6-FEET OF EQUIPMENT SKID AND 25-FEET OF TOWER
16. GROUND ILC, ALARM JUNCTION BOX AND FIBER JUNCTION BOX
17. GROUND GENERATOR TO GROUND RING WITH #2 SOLID BARE TINNED COPPER LEADS
18. GROUND SKID SUPPORT COLUMNS TO GROUND RING WITH #2 SOLID BARE TINNED COPPER LEADS
19. GROUND EQUIPMENT CABINETS TO GROUND RING WITH #2 SOLID BARE TINNED COPPER LEADS
20. MASTER GROUND BAR
21. INSPECTION WELL (TYP.); SEE PAGE G-3 FOR DETAIL
22. GROUND GPS TO ICE BRIDGE POST; SEE PAGE A-4 FOR DETAIL
23. (4) GROUND LEADS FROM TOWER STEEL TO GROUND RING (USE GROUNDING TABS WHEN AVAILABLE)
24. GROUND FOR SKID FOUNDATION REBAR
25. DISTRIBUTION SURGE PROTECTOR; GROUND WITH #2 STRANDED INSULATED GROUND LEAD

NOTE:

- THE GROUNDING SHALL BE TESTED PRIOR TO FINAL BACKFILLING. DOCUMENTATION OF 5 OHM OR LESS RESISTANCE TO BE PROVIDED TO PROJECT MANAGER.
- ALL NON-INSULATED GROUND LEADS EXTENDING ABOVE GROUND LEVEL SHALL BE ENCASED IN 3/4" PVC & SEALED WITH SILICONE. PVC SHALL BE MIN. 16" INTO EARTH & EXTEND MIN. 6" ABOVE GROUND.

-INSTALL 18" X 18" COPPER PLATES IN LIEU OF GROUND RODS WHEN INSTALLING OVER TOWER FOUNDATION OR WHERE DRIVING GROUND RODS IS NOT FEASIBLE.

NORTH

NOTE:

- TOP OF EACH GROUND ROD SHALL EXTEND NO MORE THAN 6" ABOVE BOTTOM OF TRENCH

NOTE:

ANY CONDUCTIVE UTILITY JUNCTION BOX OR ENCLOSURE SHALL BE BONDED TO THE EARTH GROUND SYSTEM W/ A #2 SOLID BARE TINNED COPPER GROUND LEAD

GROUNDING NOTE:

THE LAYOUT OF RADIALS AND GROUND RODS ARE APPROXIMATE IN NATURE AND MAY NEED TO BE ADJUSTED IN THE FIELD. GROUND RODS SHOULD NOT EXTEND THROUGH THE TOWER FOUNDATION OR OTHER STRUCTURAL ELEMENTS WITHOUT PRIOR APPROVAL FROM THE DESIGN ENGINEER. IN ADDITION, SOME ADJUSTMENT TO THE GROUND METHOD MAY BE REQUIRED IN INSTANCES WHERE SHALLOW BEDROCK OR OTHER UNIQUE CIRCUMSTANCES ARE ENCOUNTERED. CONTRACTOR SHALL CONSULT GEOTECHNICAL REPORT FOR FURTHER DESIGN AND CONSTRUCTION RECOMMENDATIONS.

GROUNDING ELECTRODE SYSTEM NOTES:

1. CONNECTIONS:
   ALL CONNECTIONS SHALL BE EXOTHERMICALLY CONNECTED UNLESS NOTED OTHERWISE. CONTRACTOR TO FOLLOW ALL MANUFACTURER'S GUIDELINES & RECOMMENDATIONS.
2. ALL ELECTRICAL AND MECHANICAL GROUND CONNECTIONS SHALL HAVE ANTI-OXIDANT COMPOUND APPLIED TO CONNECTION.
3. FENCE/GATE:
   GROUND FENCE POSTS WITHIN 6-FEET OF ENCLOSURE AND 25-FEET OF TOWER. GROUND EACH GATE POST AND CORNER POST. GROUND CONNECTIONS TO FENCE POSTS SHALL BE MADE BY THE EXOTHERMIC PROCESS AND INSTALLED PER MANUFACTURER'S RECOMMENDATIONS AND PROCEDURES.
4. CONTRACTOR SHALL SUBMIT THE GROUND RESISTANCE TEST REPORT AS FOLLOWS:
   A. ONE (1) COPY TO THE OWNER REPRESENTATIVE
   B. ONE (1) COPY TO THE ENGINEER
   C. ONE (1) COPY TO KEEP INSIDE EQUIPMENT ENCLOSURE

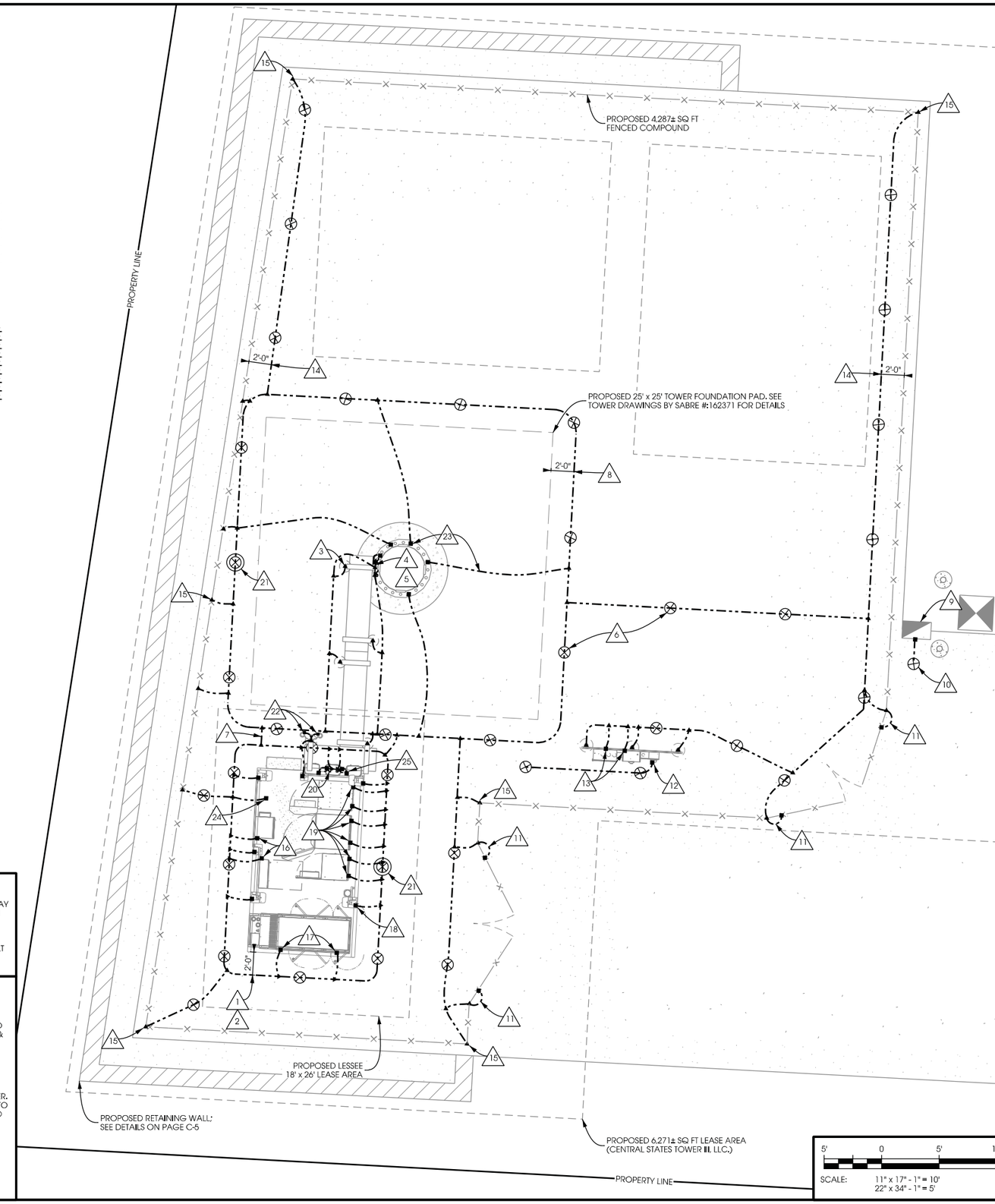

SCALE: 11" x 17" - 1" = 10' 22" x 34" - 1" = 5'

Edge Consulting Engineers, Inc.
624 Water Street
Prairie du Sac, WI 53578
608.644.1449 voice
608.644.1549 fax
www.edgeconsult.com

GROUNDING PLAN
JENNA DR [287996]
VERONA, WISCONSIN

SHEET TITLE:

PRELIMINARY DWGS:	INT:
CD 90's V.1 - 03/31/2017	CV
STAMPED PERMIT DWGS:	
STAMPED FINAL DWGS:	
FINAL CDs V.1 - 07/12/2017	NAT

CHECKED BY: PCM
PLOT DATE: 7/12/2017
PROJECT #: 15154
FILE NAME: G-1.dgn

SHEET NUMBER: G-1

I:\15100\15154\CAD\Plot\CD\G-1.dgn

© EDGE CONSULTING ENGINEERS, INC.

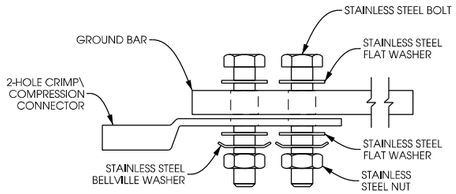

SINGLE CONNECTOR AT GROUND BARS

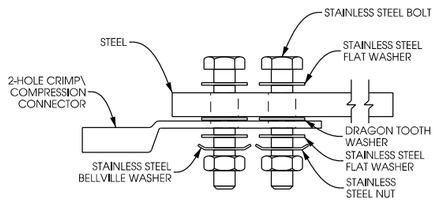

SINGLE CONNECTOR AT STEEL OBJECTS

NOTES

- ALL OUTDOOR HARDWARE (BOLTS, SCREWS, NUTS, WASHERS) SHALL BE 18-8 STAINLESS STEEL TYPE GRADE. INDOORS, GRADE 5 STEEL HARDWARE MAY BE USED.
- CHOOSE BOLT LENGTH TO ALLOW THE EXPOSURE OF AT LEAST TWO THREADS.
- BACK TO BACK LUG CONNECTIONS ARE AN ACCEPTABLE PRACTICE WHEN BONDED TO A GROUND BAR OR STEEL OBJECTS.
- AT CONNECTIONS MADE TO STEEL OR ANY OTHER DISSIMILAR METALS, A DRAGON TOOTH WASHER MEETING VZW PRACTICES SHALL BE USED BETWEEN THE CONNECTOR AND STEEL.
- IF NOT USING DRAGON TOOTH WASHERS, THOROUGHLY REMOVE A SECTION OF PAINT OR COATING APPROXIMATELY THE SAME SIZE AS CONNECTOR. REMOVE THE PAINT FROM SURFACE USING A DREMEL TYPE TOOL.
- USE AN APPROVED ANTI-OXIDATION COMPOUND ON ALL GROUNDING CONNECTIONS. A COPPER COSMOLINE GREASE BASED COMPOUND (NO OX-ID) SHALL BE USED ON ALL COPPER TO COPPER CONNECTIONS. A ZINC BASED (GREY COLORED) COMPOUND SHALL BE USED ON ALL COPPER TO STEEL CONNECTIONS.
- WHEN BONDING TO A METALLIC OBJECT WHERE ACCESS IS LIMITED TO ONLY ONE SURFACE, DRILLING & TAPPING OR SELF DRILLING SCREWS ARE THE PREFERRED AND ACCEPTABLE MEANS OF CONNECTION. SHEET METAL SCREWS SHALL NOT BE USED.

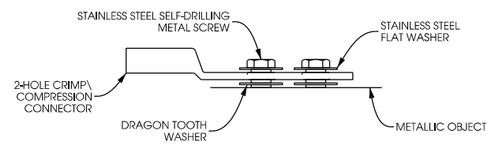

SINGLE CONNECTOR AT METALLIC/STEEL OBJECTS

A LUG DETAIL

SCALE: NTS

KEYED GROUNDING NOTES:

- (A) MONOPOLE TOWER
- (B) REMOTE RADIO UNIT; GROUND WITH #2 STRANDED INSULATED GROUND LEAD
- (C) DISTRIBUTION SURGE PROTECTOR; GROUND WITH #2 STRANDED INSULATED GROUND LEAD
- (D) # 6 INSULATED TINNED COPPER CABLE GROUND KITS TO GROUND BAR; COMMSCOPE PART # UG12158-15B4-T OR APPROVED EQUIVELANT
- (E) UPPER ANTENNA GROUND BAR; MOUNT GROUND BAR DIRECTLY TO STEEL
- (F) CABLE, MAINTAIN MINIMUM BEND RADIUS
- (G) JUMPER, MAINTAIN MINIMUM BEND RADIUS
- (H) CLAMP #2 STRANDED INSULATED COPPER GROUND LEAD TO TOWER STEEL W/ HARGERS HEAVY DUTY TINNED FLANGE BONDING PLANT(P/N# 223T), OR APPROVED EQUIVALENT
- (I) CADWELD #2 STRANDED INSULATED COPPER GROUND LEAD TO ANTENNA MAST PIPE

**ALL GROUND LEADS TO BE ROUTED IN A DOWNWARD FASHION.

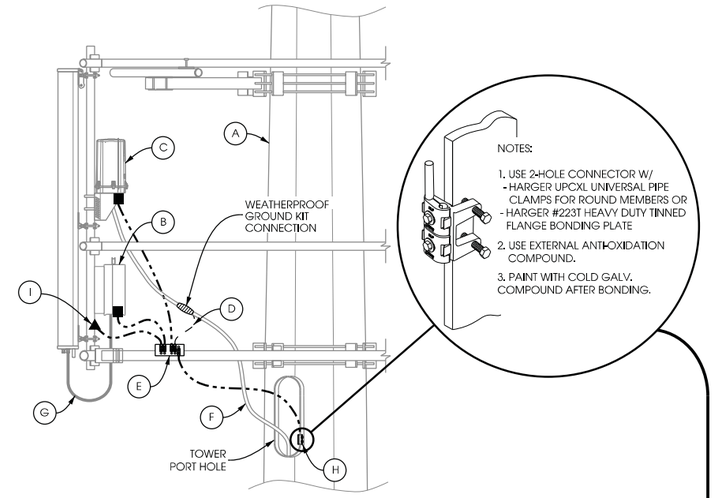

B ANTENNA LEVEL GROUNDING DETAILS

SCALE: NTS

KEYED GROUNDING NOTES:

- (A) ICE BRIDGE
- (B) EQUIPMENT SKID
- (C) BACKUP GENERATOR
- (D) DISTRIBUTION SURGE PROTECTOR; GROUND WITH #2 STRANDED INSULATED GROUND LEAD
- (E) MASTER GROUND BAR BY ELECTRICAL CONTRACTOR; EXTEND (2) #2 SOLID BARE TINNED COPPER GROUND LEADS DOWN INTO SEALED 1/2" PVC CONDUITS
- (F) (2) #2 SOLID BARE TINNED COPPER GROUND LEADS BETWEEN GENERATOR AND EQUIPMENT SKID GROUND RING THROUGH SEALED 1/2" CONDUIT
- (G) GROUND FOR SKID FOUNDATION REBAR; SEE PAGE G-3 FOR DETAIL
- (H) 1/2" DIA. PVC CONDUIT; EXTEND PVC CONDUIT 24" BELOW GRADE AND FILL WITH SILICONE (TYP.)
- (I) MONOPOLE TOWER
- (J) # 6 INSULATED TINNED COPPER CABLE GROUND KITS TO GROUND BAR; COMMSCOPE PART # UG12158-15B4-T OR APPROVED EQUIVELANT
- (K) 4" x 20" x 1/4" TINNED, INSULATED, NON-ISOLATED COPPER GROUND BAR FOR GROUND KITS
- (L) PROVIDE (2) #2 SOLID BARE TINNED COPPER GROUND LEADS FROM LOWER TOWER GROUND BAR TO TOWER GROUND RING AND (1) #2 SOLID BARE TINNED COPPER GROUND LEAD FROM LOWER TOWER GROUND BAR TO TOWER STEEL; ALL LEADS TO BE ENCASED IN 1/2" SEALED CONDUIT
- (M) CABLES WITH DRIPLOOP INSTALLED BY ANTENNA CONTRACTOR, MAINTAIN MINIMUM BEND RADIUS
- (N) #2 SOLID BARE TINNED COPPER GROUND JUMPER BETWEEN ICE BRIDGE AND STEEL SUPPORT POST BY ANTENNA CONTRACTOR; ORIENT WITH HIGH SIDE TOWARDS TOWER
- (O) #2 SOLID BARE TINNED COPPER GROUND LEADS TO ICE BRIDGE POSTS IN 1/2" PVC CONDUIT
- (P) IF APPLICABLE: #2 SOLID BARE TINNED COPPER GROUND LEADS (4) FROM TOWER STEEL TO GROUND RING; USE GROUNDING TABS WHEN AVAILABLE
- (Q) #2 TINNED COPPER GROUND LEAD BETWEEN EQUIPMENT SKID CANOPY AND STEEL SUPPORT POST
- (R) #2 TINNED COPPER GROUND LEAD BETWEEN SKID SUPPORT COLUMN AND EQUIPMENT SKID GROUND RING THROUGH SEALED 1/2" CONDUIT
- (S) EQUIPMENT CABINET GROUNDING; EXTEND (2) #2 SOLID BARE TINNED COPPER GROUND LEADS TO GROUND RING THROUGH SEALED 1/2" PVC CONDUITS
- (T) #2 TINNED COPPER GROUND LEAD BETWEEN UTILITY ENCLOSURES AND EQUIPMENT SKID GROUND RING THROUGH SEALED 1/2" CONDUIT
- (U) #2 GREEN STRANDED INSULATED COPPER GROUND LEAD WITH 2-HOLE LUGS BETWEEN ICE BRIDGE SECTIONS

LEGEND

- ▲ EXOTHERMIC CONNECTION (CADWELD OR EQUIVALENT)
- ■ MECHANICAL CONNECTION (BURNDY OR EQUIVALENT)
- #2 SOLID BARE TINNED COPPER GROUND LEAD
- #6 INSULATED TINNED COPPER GROUND LEAD
- #2 GREEN STRANDED INSULATED COPPER GROUND LEAD

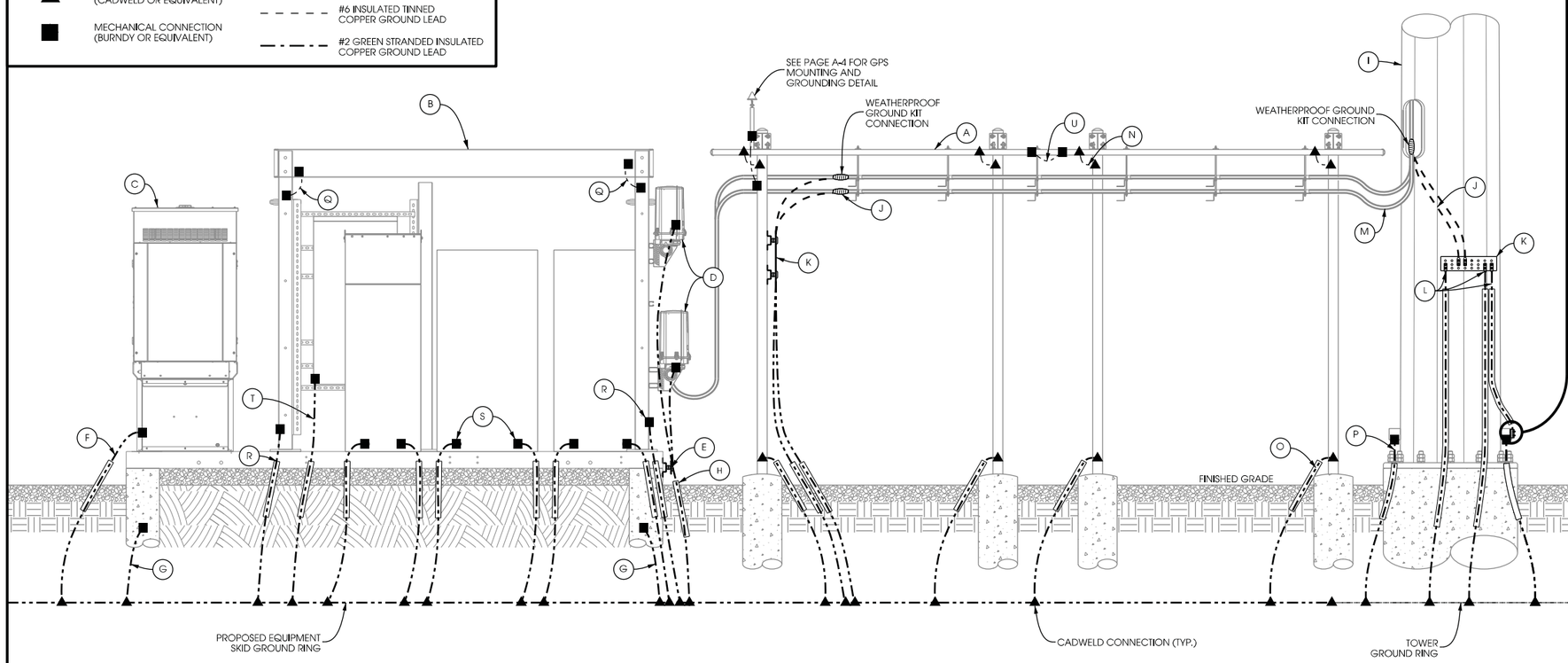

C GROUND LEVEL GROUNDING DETAILS

SCALE: NTS

Edge Consulting Engineers, Inc.
624 Water Street
Prairie du Sac, WI 53578
608.644.1449 voice
608.644.1549 fax
www.edgeconsult.com

GROUNDING DETAILS
JENNA DR [287996]
VERONA, WISCONSIN

SHEET TITLE:

PRELIMINARY DWGS:	INT:
CD 90's V.1 - 03/31/2017	CV
STAMPED PERMIT DWGS:	
STAMPED FINAL DWGS:	
FINAL CDs V.1 - 07/12/2017	NAT

CHECKED BY: PCM
PLOT DATE: 7/12/2017
PROJECT #: 15154
FILE NAME: G-2.dgn
SHEET NUMBER: G-2

I:\15100\15154\CAD\Plot\CD\G-2.dgn

© EDGE CONSULTING ENGINEERS, INC.

NOTES:
- FOUNDATION GROUNDING PER NEC 250.52(3)(A)
- FOUNDATION GROUNDING CONNECTIONS TO BE COVERED BY A MINIMUM OF 3" OF CONCRETE.
- REBAR GROUNDING SHALL BE MADE TO A MIN. 20' CONTINUOUS REBAR, IF POSSIBLE.

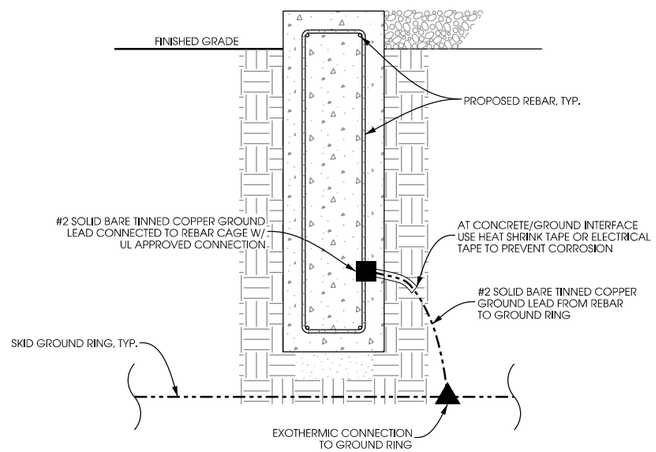

A SKID FOUNDATION GROUNDING

SCALE: NTS

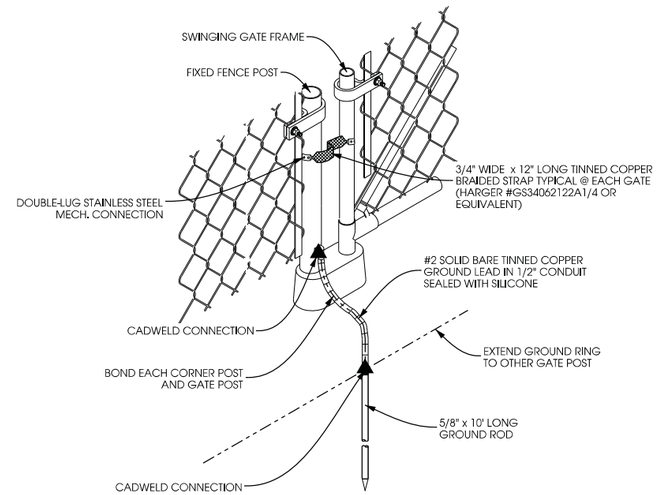

B GATE GROUNDING DETAIL

SCALE: NTS

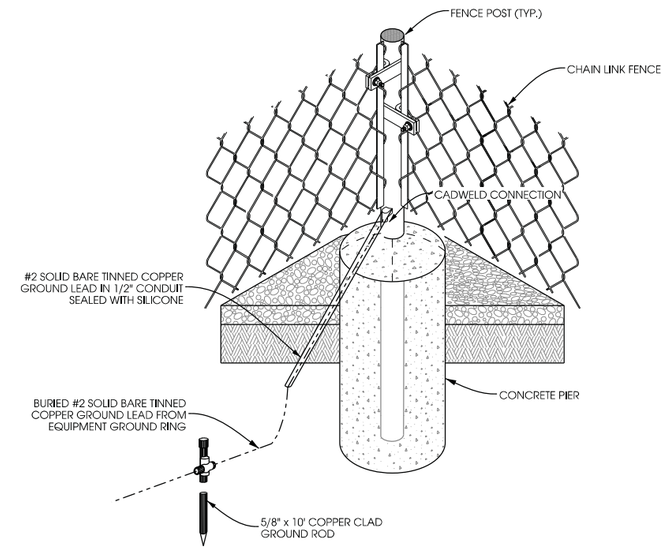

C FENCE POST GROUNDING DETAIL

SCALE: NTS

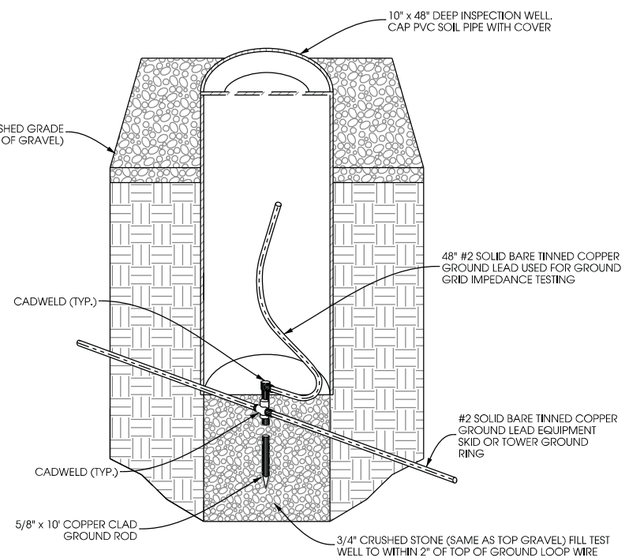

D INSPECTION WELL DETAIL

SCALE: NTS

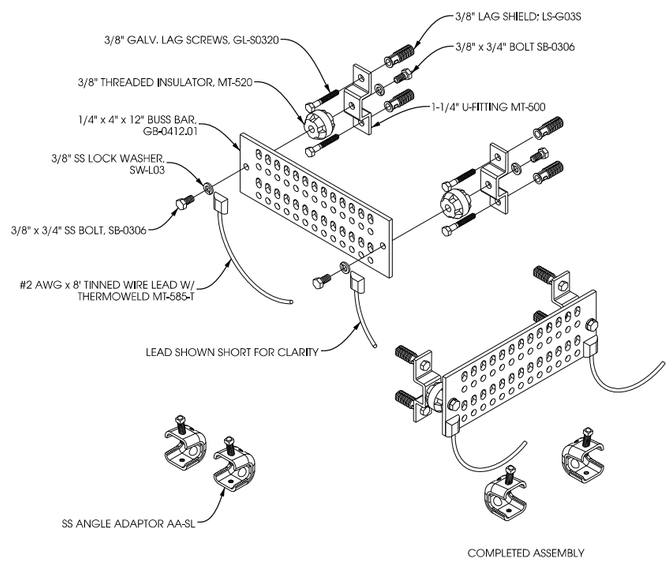

E GROUND AND BUSS BAR DETAIL

SCALE: NTS

HARGER PART #:

CPC1/1.25 - NOMINAL PIPE SIZE RANGE: 1" -1.25"
CPC1.5/2 - NOMINAL PIPE SIZE RANGE: 1.5" - 2"
CPC2.5/3 - NOMINAL PIPE SIZE RANGE: 2.5" - 3"
CPC3.5/4 - NOMINAL PIPE SIZE RANGE: 3.5" - 4"
CPC5/6 - NOMINAL PIPE SIZE RANGE: 5" - 6"

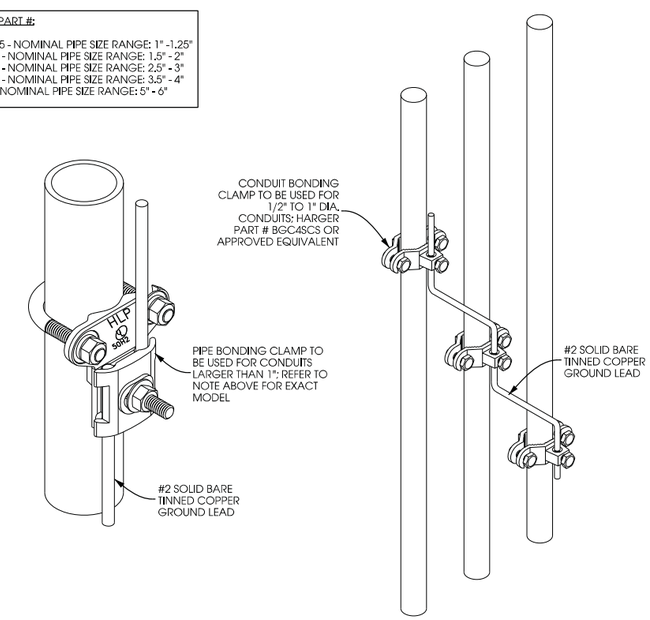

F CONDUIT GROUNDING

SCALE: NTS

Edge Consulting Engineers, Inc.
624 Water Street
Prairie du Sac, WI 53578
608.644.1449 voice
608.644.1549 fax
www.edgeconsult.com

GROUNDING DETAILS
JENNA DR [2887996]
VERONA, WISCONSIN

SHEET TITLE:

PRELIMINARY DWGS:	INI:
CD 90's V.1 - 03/31/2017	CV
STAMPED PERMIT DWGS:	
STAMPED FINAL DWGS:	
FINAL CDs V.1 - 07/12/2017	NAT

CHECKED BY: PCM
PLOT DATE: 7/12/2017
PROJECT #: 15154
FILE NAME: G-3.dgn
SHEET NUMBER: G-3

I:\15100\15154\CAD\Plot\CD\G-3.dgn

© EDGE CONSULTING ENGINEERS, INC.

GENERAL

THE CONSTRUCTION DRAWINGS AND SPECIFICATIONS ARE INTERRELATED WHEN PERFORMING THE WORK. EACH CONTRACTOR MUST REFER TO ALL DRAWINGS. COORDINATION IS THE RESPONSIBILITY OF THE GENERAL CONTRACTOR.

DIVISION 1: GENERAL REQUIREMENTS

SECTION 01700 - PROJECT CLOSEOUT

PART 1 - GENERAL

A. OBTAIN AND SUBMIT RELEASES ENABLING THE OWNER UNRESTRICTED USE OF THE WORK AND ACCESS TO SERVICES AND UTILITIES. INCLUDE OCCUPANCY PERMITS, OPERATING CERTIFICATES, AND SIMILAR RELEASES.

B. SUBMIT RECORD DRAWINGS, DAMAGE, OR SETTLEMENT SURVEY, PROPERTY SURVEY, AND SIMILAR FINAL RECORD INFORMATION.

C. COMPLETE FINAL CLEAN-UP REQUIREMENTS, INCLUDING TOUCH-UP PAINTING. TOUCH-UP AND OTHERWISE REPAIR AND RESTORED MARRED EXPOSED FINISHES.

PART 2 - FINAL CLEANING/PROJECT CLOSEOUT

1. COMPLETE THE FOLLOWING OPERATIONS BEFORE REQUESTING INSPECTION FOR CERTIFICATE OF COMPLETION:

A. CLEAN THE PROJECT SITE, YARD AND GROUNDS IN AREAS DISTURBED BY CONSTRUCTION ACTIVITIES, INCLUDING LANDSCAPE DEVELOPMENT, AREAS OF RUBBISH, WASTE MATERIALS, LITTER AND FOREIGN SUBSTANCES. SWEEP PAVED AREAS BROOM CLEAN. REMOVE PETRO-CHEMICAL SPILLS, STAINS AND OTHER FOREIGN DEPOSITS. RAKE GROUNDS THAT ARE NEITHER PLANTED NOR PAVED TO A SMOOTH, EVEN-TEXTURED SURFACE.

B. REMOVE TOOLS, CONSTRUCTION EQUIPMENT, MACHINERY, AND SURPLUS MATERIAL FROM THE SITE.

C. REMOVE SNOW AND ICE TO PROVIDE SAFE ACCESS TO THE SITE AND EQUIPMENT BUILDING.

D. CLEAN EXPOSED EXTERIOR AND INTERIOR HARD-SURFACED FINISHES TO A DIRT-FREE CONDITION. FREE OF STAINS, FILMS AND SIMILAR FOREIGN SUBSTANCES. AVOID DISTURBING NATURAL WEATHERING OF EXTERIOR SURFACES.

E. REMOVE DEBRIS FROM LIMITED ACCESS SPACES, INCLUDING ROOFS, EQUIPMENT BUILDING, MANHOLES AND SIMILAR SPACES.

F. REMOVE LABELS THAT ARE NOT PERMANENT LABELS.

G. TOUCH-UP AND OTHERWISE REPAIR AND RESTORE MARRED EXPOSED FINISHES AND SURFACES. REPLACE FINISHES AND SURFACES THAT CAN NOT BE SATISFACTORILY BE REPAIRED OR RESTORED, OR THAT SHOW EVIDENCE OF REPAIR OR RESTORATION. DO NO PAINT OVER "UL" AND SIMILAR LABELS, INCLUDING ELECTRICAL NAME PLATES.

H. LEAVE THE PROJECT CLEAN AND READY FOR OCCUPANCY.

I. DUST OFF ALL EQUIPMENT, INCLUDING BATTERY PACKS, WITHIN EQUIPMENT BUILDING.

J. GENERAL CONTRACTOR TO CLEAN AND APPLY STATIC-FREE WAX TO THE FLOORS ONCE FINAL SHELTER EQUIPMENT AND ACCESSORIES ARE COMPLETED.

2. REMOVAL OF PROTECTION

REMOVE TEMPORARY PROTECTION AND FACILITIES INSTALLED DURING CONSTRUCTION TO PROTECT PREVIOUSLY COMPLETED INSTALLATIONS DURING THE REMAINDER OF THE CONSTRUCTION PERIOD.

DIVISION 2: SITE WORK

SECTION 02200 - EARTHWORK AND DRAINAGE

PART 1 - GENERAL

1. WORK INCLUDED - SEE SITE PLAN

2. DESCRIPTIONS

ACCESS DRIVE WITH TURN-AROUND AREA, LEASE AREA, AND, IF APPLICABLE, UNDERGROUND UTILITY EASEMENTS ARE TO BE CONSTRUCTED TO PROVIDE A WELL-DRAINED, EASILY MAINTAINED, EVEN SURFACE FOR MATERIAL AND EQUIPMENT DELIVERIES AND MAINTENANCE PERSONNEL ACCESS.

3. QUALITY ASSURANCE

A. APPLY SOIL STERILIZER IN ACCORDANCE WITH MANUFACTURER'S RECOMMENDATIONS (AS NEEDED).

B. APPLY AND MAINTAIN GRASS SEED AS RECOMMENDED BY THE SEED PRODUCER (AS NEEDED).

C. PLACE AND MAINTAIN VEGETATION LANDSCAPING, IF INCLUDED WITHIN THE CONTRACT, AS RECOMMENDED BY NURSERY INDUSTRY STANDARDS.

4. SEQUENCING

A. CONFIRM SURVEY STAKES AND SET ELEVATIONS STAKES PRIOR TO ANY CONSTRUCTION.

B. COMPLETELY GRUB THE ACCESS DRIVE WITH TURN-AROUND, UNDERGROUND UTILITY EASEMENTS (IF APPLICABLE), AND LEASE AREA PRIOR TO FOUNDATION CONSTRUCTION, PLACEMENT OF BACKFILL AND SUB-BASE MATERIAL.

C. CONSTRUCT TEMPORARY CONSTRUCTION AREA ALONG ACCESS DRIVE.

D. BRING THE LEASE AREA AND ACCESS DRIVE WITH TURN-AROUND TO BASE COURSE ELEVATION PRIOR TO INSTALLING FOUNDATION.

E. APPLY SOIL STERILIZER PRIOR TO PLACING BASE MATERIALS SUCH THAT THE STERILIZER ONLY COMES IN CONTACT WITH PROPOSED GRAVEL SURFACES

F. GRADE, SEED, FERTILIZE, AND MULCH ALL AREAS DISTURBED BY CONSTRUCTION (INCLUDING UNDERGROUND UTILITY EASEMENTS) IMMEDIATELY AFTER BRINGING LEASE AND ACCESS DRIVE WITH TURN-AROUND TO BASE COURSE ELEVATION. WATER TO ENSURE GROWTH.

G. REMOVE GRAVEL FROM TEMPORARY CONSTRUCTION ZONE TO AN AUTHORIZED AREA OR AS DIRECTED BY THE PROJECT MANAGER.

H. AFTER APPLICATIONS OF FINAL SURFACES, APPLY SOIL STERILIZER TO STONE SURFACES.

5. SUBMITTALS

A. BEFORE CONSTRUCTION
IF LANDSCAPING IS APPLICABLE TO THE CONTRACT, SUBMIT TWO (2) COPIES OF THE LANDSCAPE PLAN UNDER NURSERY LETTERHEAD. IF LANDSCAPE ALLOWANCE WAS INCLUDED IN THE CONTRACT, PROVIDE AN ITEMIZED LISTING OF PROPOSED COSTS ON NURSERY LETTERHEAD. REFER TO PLANS FOR LANDSCAPING REQUIREMENTS.

G. PLACE FILL OR STONE IN SIX (6) INCH MAXIMUM LIFTS, AND COMPACT BEFORE PLACING NEXT LIFT.

B. AFTER CONSTRUCTION

1. MANUFACTURER'S DESCRIPTION OF PRODUCT AND WARRANTY STATEMENT ON SOIL STERILIZED.

2. MANUFACTURER'S DESCRIPTION OF PRODUCT ON GRASS SEED AND FERTILIZER.

3. LANDSCAPING WARRANTY STATEMENT.

6. WARRANTY

A. IN ADDITION TO THE WARRANTY ON ALL CONSTRUCTION COVERED IN THE CONTRACT DOCUMENTS, THE CONTRACTOR SHALL REPAIR ALL DAMAGE AND RESTORE AREA AS CLOSE TO ORIGINAL CONDITION AS POSSIBLE AT SITE AND SURROUNDINGS.

B. SOIL STERILIZATION APPLICATION TO GUARANTEE VEGETATION FREE ROAD AND SITE AREAS FOR ONE YEAR FOM DATE OF FINAL INSPECTION.

C. DISTURBED AREAS WILL REFLECT GROWTH OF NEW GRASS PRIOR TO FINAL INSPECTION.

D. LANDSCAPING, IF INCLUDED WITHIN THE SCOPE OF THE CONTRACT, WILL BE GUARANTEED FOR ONE YEAR FROM THE DATE OF FINAL INSPECTION.

PART 2 - PRODUCTS

1. MATERIALS

A. SOIL STERILIZER SHALL BE AN EPA REGISTERED, PRE-EMERGENCE LIQUID:

TOTAL KILL PRODUCT 910 EPA 10292-7	PHASAR CORPORATION P.O. BOX 5123 DEARBORN, MI 48128 313.563.8000
AMBUSH HERBICIDE EPA REGISTERED	FRAMAR INDUSTRIAL PRODUCTS 1435 MORRIS AVENUE UNION, NJ 07083 800.526.4924

B. ROAD AND SITE MATERIALS SHALL CONFORM TO DOT SPECIFICATIONS (UNLESS OTHERWISE NOTED). ACCEPTABLE SELECT FILL SHALL BE IN ACCORDANCE WITH STATE DEPARTMENT OF HIGHWAY AND TRANSPORTATION STANDARD SPECIFICATIONS.

C. SOIL STABILIZED FABRIC SHALL BE MIRAFI - 500X.

PART 3 - EXECUTION

1. INSPECTIONS

LOCAL BUILDING INSPECTORS SHALL BE NOTIFIED NO LESS THAN 48 HOURS IN ADVANCE OF CONCRETE POURS, UNLESS OTHERWISE SPECIFIED BY THE LOCAL JURISDICTION.

2. PREPARATION

A. CLEAR TREES, BRUSH AND DEBRIS FROM LEASE AREA, ACCESS DRIVE WITH TURN-AROUND, AND UNDERGROUND UTILITY EASEMENTS AS REQUIRED FOR CONSTRUCTION.

B. PRIOR TO OTHER EXCAVATION AND CONSTRUCTION, GRUB ORGANIC MATERIAL TO A MINIMUM OF SIX (6) INCHES BELOW GRADE.

C. UNLESS OTHERWISE INSTRUCTED BY LEASEE, TRANSPORT ALL REMOVED TREES, BRUSH AND DEBRIS FROM THE PROPERTY TO AN AUTHORIZED LANDFILL.

D. PRIOR TO PLACEMENT OF FILL OR BASE MATERIALS, ROLL THE SOIL.

E. WHERE UNSTABLE SOIL CONDITIONS ARE ENCOUNTERED, LINE THE AREAS WITH A STABILIZED MAT PRIOR TO PLACEMENT OF FILL OR BASE MATERIAL.

F. PRIOR TO PLACEMENT OF FILL OR BASE MATERIALS. REMOVE SOFT SPOTS, PLACE SELECT FILL, AND COMPACT TO 95% MODIFIED PROCTOR.

3. INSTALLATION

A. GRADE OR FILL THE LEASE AREA AND ACCESS DRIVE WITH TURN-AROUND AS REQUIRED IN ORDER THAT UPON DISTRIBUTION OF SPOILS RESULTING FROM EXCAVATIONS, THE RESULTING GRADE WILL CORRESPOND WITH SAID SUB-BASE COURSE. ELEVATIONS ARE TO BE CALCULATED FROM BENCHMARK, FINISHED GRADES, OR INDICATED SLOPES.

B. CLEAR EXCESS SPOILS, IF ANY, FROM JOB SITE AND DO NOT SPREAD BEYOND THE LIMITS OF PROJECT AREA UNLESS AUTHORIZED BY PROJECT MANAGER AND AGREED TO BY LANDOWNER.

C. BRING THE ACCESS DRIVE WITH TURN-AROUND TO BASE COURSE ELEVATION TO FACILITATE CONSTRUCTION AND OBSERVATION DURING CONSTRUCTION OF THE SITE.

D. AVOID CREATING DEPRESSIONS WHERE WATER MAY POND.

E. THE CONTRACT SHALL INCLUDE GRADING, BANKING, AND DITCHING, UNLESS OTHERWISE NOTED.

F. WHEN IMPROVING AN EXISTING ACCESS DRIVE, GRADE THE EXISTING DRIVE TO REMOVE ANY ORGANIC MATTER AND SMOOTH THE SURFACE BEFORE PLACING FILL OR STONE.

H. THE TOP SURFACE COURSE SHALL EXTEND A MINIMUM OF ONE (1) FOOT BEYOND THE SITE FENCE, UNLESS OTHERWISE NOTED, AND SHALL COVER THE AREA AS INDICATED.

I. NO SLOPES ARE TO BE GREATER THAN 3:1.

J. APPLY RIP-RAP TO THE SIDES OF DITCHES AND DRAINAGE SWALES WHERE INDICATED ON THE DRAWINGS.

K. RIP-RAP ENTIRE DITCH FOR SIX (6) FEET IN ALL DIRECTIONS AT CULVERT OPENINGS. (WHEN APPLICABLE)

L. APPLY SEED, FERTILIZER, AND STRAW COVER TO ALL OTHER DISTURBED AREAS, DITCHES, AND DRAINAGE SWALES, NOT OTHERWISE RIP-RAPPED.

M. UNDER NO CIRCUMSTANCES WILL DITCHES, SWALES, OR CULVERTS BE PLACED SO THAT THEY DIRECT WATER TOWARDS, OR PERMIT STANDING WATER IMMEDIATELY ADJACENT TO SHELTER OR EQUIPMENT. IF DESIGNS OR ELEVATIONS ARE IN CONFLICT WITH THIS, ADVISE CONSTRUCTION MANAGER IMMEDIATELY.

N. IN DITCHES WITH SLOPES GREATER THAN 10%, MOUND DIVERSIONARY HEADWALLS IN THE DITCH AT AN ANGLE NO GREATER THAN 60° OFF THE DITCH LINE. RIP-RAP THE UPSTREAM SIDE OF THE HEADWALL AS WELL AS THE DITCH FOR SIX (6) FEET ABOVE THE CULVERT ENTRANCE.

O. APPLY SEED AND FERTILIZER TO SURFACE CONDITIONS WHICH WILL ENCOURAGE ROOTING. RAKE AREAS TO BE SEEDED TO EVEN THE SURFACE AND LOOSEN THE SOIL.

P. SOW SEED IN TWO DIRECTIONS IN TWICE THE QUANTITY RECOMMENDED BY THE SEED PRODUCER.

Q. ENSURE GROWTH OF SEEDED AND LANDSCAPED AREAS BY WATERING UP TO THE POINT OF RELEASE FROM THE CONTRACT. CONTINUE TO REWORK THE BARE AREAS UNTIL COMPLETE COVERAGE IS OBTAINED.

4. FIELD QUALITY CONTROL

COMPACT SOILS TO MAXIMUM DENSITY IN ACCORDANCE WITH ASTM D-1557. AREAS OF SETTLEMENT WILL BE EXCAVATED AND REFILLED AT CONTRACTOR'S EXPENSE. INDICATE PERCENTAGE OF COMPACTION ACHIEVED ON AS-BUILT DRAWINGS.

5. PROTECTION

A. PROTECT SEEDED AREAS FROM EROSION BY SPREADING STRAW TO A UNIFORM LOOSE DEPTH OF 1-2 INCHES, STAKE AND TIE DOWN AS REQUIRED. USE OF EROSION CONTROL MESH OR MULCH NET WILL BE AN ACCEPTABLE ALTERNATE.

B. ALL TREES PLACED IN CONJUNCTION WITH A LANDSCAPE CONTRACT WILL BE WRAPPED, TIED WITH HOSE PROTECTED WIRE, AND SECURED TO 2" x 2" x 4' - 0" WOODEN STAKES EXTENDING TWO-FEET INTO THE GROUND ON FOUR SIDES OF THE TREE.

C. PROTECT ALL EXPOSED AREAS AGAINST WASHOUTS AND SOIL EROSION. ALL EROSION CONTROL METHODS SHALL CONFORM TO APPLICABLE BUILDING CODE REQUIREMENTS.

SECTION 02830 - CHAIN-LINK FENCING AND GATE(S)

PART 1 - GENERAL

1. WORK INCLUDED

SEE PLAN FOR SITE AND LOCATION OF FENCE AND GATE(S).

2. QUALITY ASSURANCE

ALL STEEL MATERIALS UTILIZED IN CONJUNCTION WITH THIS SPECIFICATION WILL BE GALVANIZED OR STAINLESS STEEL. WEIGHT OF ZINC COATING ON THE FABRIC SHALL NOT BE LESS THAN TWELVE (12) OUNCES PER SQUARE FOOT OF MATERIAL COVERED. POSTS SHALL BE HOT-DIPPED IN GRADE 'E' ZINC, EIGHTEEN (18) OUNCES PER SQUARE FOOT.

3. SEQUENCING

IF THE SITE AREA HAS BEEN BROUGHT UP TO SURFACE COURSE ELEVATION (PRIOR TO THE FENCE CONSTRUCTION), FENCE POST EXCAVATION SPOILS MUST BE CONTROLLED TO PRECLUDE CONTAMINATION OF SAID SURFACE COURSE.

4. SUBMITTALS

A. MANUFACTURER'S DESCRIPTIVE LITERATURE.

B. CERTIFICATE OR STATEMENT OF COMPLIANCE WITH THE SPECIFICATIONS.

PART 2 - PRODUCTS

1. FENCE MATERIAL

A. ALL FABRIC WIRE, RAILS, HARDWARE, AND OTHER STEEL MATERIALS SHALL BE HOT-DIPPED GALVANIZED.

B. FABRIC SHALL BE 9 GAUGE. THE FABRIC SHALL HAVE A KNUCKLED FINISH FOR THE TOP SELVAGES. FABRIC SHALL CONFORM TO THE SPECIFICATIONS OF ASTM A-392 CLASS 1.

C. BARBED WIRE SHALL BE DOUBLE-STRAND, 12-1/2 GAUGE TWISTED WIRE, WITH 14-GAUGE, 4-POINT ROUND BARBS SPACED ON FIVE (5) INCH CENTERS.

D. ALL POSTS SHALL BE SCHEDULE - 40 MECHANICAL SERVICE PIPE AND SHALL BE PER ASTM-F1083 AND OF THE FOLLOWING ACTUAL OUTER DIAMETERS:

LINE: 2.375" O.D. SCHEDULE 40

CORNER: 2.875" O.D. SCHEDULE 40 (FOR FENCE FABRIC HEIGHT OF 6' OR LESS)
3.5" O.D. SCHEDULE 40 (FOR FENCE FABRIC HEIGHT OF 8' OR LESS)

GATE: 4" O.D. SCHEDULE 40

E. GATE POSTS SHALL BE EXTENDED TWELVE (12) INCHES, INCLUDING DOME CAP, TO PROVIDE FOR ATTACHMENT OF BARBED WIRE.

F. ALL TOP AND BRACE RAILS SHALL BE 1.66" O.D. SCHEDULE - 40 MECHANICAL- SERVICE PIPE.

G. GATE FRAMES AND BRACES SHALL BE 1.9" O.D. SCHEDULE 40 MECHANICAL-SERVICE PIPE. FRAMES SHALL HAVE WELDED CORNERS.

H. GATE FRAMES SHALL HAVE A FULL-HEIGHT VERTICAL BRACE, AND A FULL-WIDTH HORIZONTAL BRACE, SECURED IN PLACE BY USE OF GATE BRACE CLAMPS.

I. GATE HINGES SHALL BE MERCHANTS METAL MODEL 64386 HINGE ADAPTER WITH MODEL 6409, 180-DEGREE ATTACHMENT.

J. THE GUIDE (LATCH ASSEMBLY) SHALL BE HEAVY INDUSTRIAL DOUBLE GATE LATCH. SEE DETAIL(S).

K. LATCHES AND STOPS SHALL BE PROVIDED FOR ALL GATES.

L. PLUNGER ROD COMPLETE WITH RECEPTOR TO BE PROVIDED AT THE INACTIVE LEAF OF ALL DOUBLE GATE INSTALLATIONS.

M. ALL STOPS SHALL HAVE KEEPERS CAPABLE OF HOLDING THE GATE LEAF IN THE OPEN POSITION.

N. A 9 GAUGE ALUMINUM TENSION WIRE SHALL BE USED AT THE BOTTOM OF THE FABRIC, TERMINATED WITH BAND CLIPS AT CORNER AND GATE POSTS.

O. A SIX (6) INCH BY 1/2 INCH DIAMETER EYEBOLT TO HOLD TENSION WIRE SHALL BE PLACED AT LINE POSTS. (WHEN APPLICABLE)

P. STRETCHER BARS SHALL BE 3/16 INCH BY 3/4 INCH OR HAVE EQUIVALENT CROSS-SECTIONAL AREA.

Q. ALL CORNER GATE AND PANELS SHALL HAVE A 3/8 INCH TRUSS ROD WITH TURNBUCKLES.

R. ALL POSTS EXCEPT GATE POSTS SHALL HAVE A COMBINATION CAP AND BARBED WIRE SUPPORTING ARM. GATE POSTS SHALL HAVE A DOME CAP.

S. OTHER HARDWARE INCLUDES, BUT MAY NOT BE LIMITED TO, TIE CLIPS, BAND CLIPS AND TENSION BAND CLIPS.

T. BARBED WIRE GATE GUARDS SHALL BE FITTED WITH DOME CAPS.

U. BARBED WIRE SUPPORT ARMS SHALL BE PRESSED STEEL COMPLETE WITH SET BOLT AND LOCK WIRE IN THE ARM.

V. ALL CAPS SHALL BE MALLEABLE IRON, DOME OR ACORN SHAPED AS REQUIRED BY PIPE SIZE.

W. WHERE THE USE OF CONCERTINA HAS BEEN SPECIFIED, 24-INCH DIAMETERS COIL, BARBED TAPE, STAINLESS STEEL CYCLONE FENCE MODEL G8P TO TYPE III SHALL BE FURNISHED. IT SHALL BE SUPPORTED ABOVE THE TOP RAIL BY USE OF SIX (6) WIRE BARBED WIRE ARMS POSITIONED ATOP EACH LINE/CORNER POST.

PART 3 - EXECUTION

1. INSPECTION

TO CONFIRM PROPER DEPTH AND DIAMETER OF POST HOLE EXCAVATIONS. ALL POST HOLES WILL BE EXCAVATED AS PER CONSTRUCTION DOCUMENTS.

2. INSTALLATION

A. FOUNDATIONS SHALL HAVE A MINIMUM SIX (6) INCH CONCRETE COVER UNDER POST.

B. ALL FENCE POSTS SHALL BE VERTICALLY PLUMB WITHIN ONE QUARTER (1/4) INCH.

C. FABRIC SHALL BE TENSIONED PER MANUFACTURER'S RECOMMENDATIONS TO PRESENT A NEAT APPEARANCE.

D. AT CORNER POSTS, GATE POSTS, AND SIDES OF GATE FRAME, FABRIC SHALL BE ATTACHED WITH STRETCHER AND TENSION BAND-CLIPS AT FIFTEEN (15) INCH INTERVALS.

E. AT LINE POSTS, FABRIC SHALL BE ATTACHED WITH BAND-CLIPS AT FIFTEEN (15) INCH INTERVALS.

F. FABRIC SHALL BE ATTACHED TO BRACE RAILS, TENSION WIRE AND TRUSS RODS WITH TIE-CLIPS AT TWO (2) FOOT INTERVALS.

G. A MAXIMUM GAP OF ONE (1) INCH WILL BE PERMITTED BETWEEN TIE CHAIN LINE FABRIC AND THE FINAL GRADE.

H. GATE SHALL BE INSTALLED SO LOCKS ARE ACCESSIBLE FROM BOTH SIDES.

I. GATE HINGE BOLTS SHALL HAVE THEIR THREADS PEENED OR WELDED TO PREVENT UNAUTHORIZED REMOVAL.

J. GATE POSTS SHALL NOT BE SHARED AS A CORNER POST.

K. CONCRETE TO BE A MINIMUM OF 3,000 PSI AT 28 DAYS. CEMENT SHALL EXCEED ASTM C150, TYPE IIIA.

3. PROTECTION

UPON COMPLETION OF ERECTION, INSPECT FENCE MATERIAL AND PAINT FIELD CUTS OR GALVANIZING BREAKS WITH ZINC-BASED PAINT, COLOR TO MATCH THE GALVANIZED METAL.

APPLICABLE STANDARDS:

ASTM-A53 SPECIFICATION FOR PIPE, STEEL BLACK AND HOT-DIPPED ZINC COATED (GALVANIZED) WELDED AND SEAMLESS. FOR ORDINARY USES.

ASTM-A123 ZINC (HOT-DIP GALVANIZED) COATING ON IRON AND STEEL PRODUCTS.

ASTM-A153 STANDARD SPECIFICATION FOR ZINC COATING (HOT-DIP) ON IRON AND STEEL HARDWARE.

ASTM-A392 SPECIFICATION FOR ZINC-COATED STEEL CHAIN LINK FENCE FABRIC.

ASTM-A491 SPECIFICATION FOR ALUMINUM-COATED STEEL CHAIN LINK FENCE FABRIC

ASTM-A525 STANDARD SPECIFICATION FOR STEEL SHEET ZINC COATED (GALVANIZED) BY THE HOT-DIPPED PROCESS.

ASTM-A570 SPECIFICATION FOR HOT-ROLLED CARBON STEEL SHEET AND STRIP, STRUCTURAL QUALITY.

ASTM-A535 SPECIFICATION FOR ALUMINUM COATED STEEL BARBED WIRE, FEDERAL SPECIFICATION RR-F-191- FENCING, WIRE AND POST METAL AND GATES, CHAIN LINK FENCE FABRIC, AND ACCESSORIES.

ASTM-F1083 SPECIFICATION FOR PIPE, STEEL HOT-DIPPED ZINC-COATED (GALVANIZED) WELDED, FOR FENCE STRUCTURES.

DIVISION 3: CONCRETE

SECTION 03000 - BASIC CONCRETE MATERIALS AND METHODS

PART 1 - GENERAL

1. WORK INCLUDED

FORMWORK, REINFORCEMENT, ACCESSORIES, CAST-IN-PLACE CONCRETE, FINISHING, AND CURING.

2. INSPECTIONS

A. CONTRACTOR IS RESPONSIBLE FOR SCHEDULING BUILDING DEPARTMENT INSPECTIONS REQUIRED FOR HIS SCOPE OF WORK.

B. ALL REINFORCING STEEL SHALL BE INSPECTED AND APPROVED BY THE LESSEE CONSTRUCTION MANAGER PRIOR TO PLACEMENT OF CONCRETE.

C. THE LESSEE CONSTRUCTION MANAGER SHALL BE NOTIFIED NO LESS THAN 48 HOURS IN ADVANCE OF CONCRETE POURS.

3. QUALITY ASSURANCE

A. CONSTRUCT AND ERECT CONCRETE FORMWORK IN ACCORDANCE WITH ACI 301 AND ACI 318.

B. PERFORM CONCRETE REINFORCING WORK IN ACCORDANCE WITH ACI 301, ACI 318, AND ASTM A184.

C. PERFORM CAST-IN-PLACE CONCRETE WORK IN ACCORDANCE WITH ACI 301, ACI 318, AND ACI 117-90.

D. OPEN FOUNDATION TRENCHES SHALL BE INSPECTED PRIOR TO CONCRETE INSTALLATION.

4. SUBMITTALS

SUBMIT CONCRETE MIX AND REINFORCING STEEL SHOP DRAWINGS FOR APPROVAL BY LESSEE CONSTRUCTION MANAGER/ENGINEER. THE SHOP DRAWINGS SHALL BE SUBMITTED IN THE FORM OF TWO (2) CONCRETE MIX DESIGN INFORMATION SHEETS AND TWO (2) BLUELINE DRAWINGS FOR REINFORCING STEEL.

PART 2 - PRODUCTS

1. REINFORCEMENT MATERIALS

A. REINFORCEMENT STEEL: ASTM A615, 60 KSI YIELD GRADE, DEFORMED BILLET STEEL BARS, PLAIN FINISH.

B. WELDED STEEL WIRE FABRIC: ASTM A185 PLAIN TYPE, IN FLAT SHEETS, PLAIN FINISH.

C. CHAIRS, BOLSTERS, BAR SUPPORTS, SPACERS. SIZED AND SHAPED TO SUPPORT REINFORCING.

D. FABRICATE CONCRETE REINFORCING IN ACCORDANCE WITH ACI 315, ACI 318, ASTM A184.

2. CONCRETE MATERIALS

A. CEMENT: ASTM C150, PORTLAND TYPE

B. FINE AND COURSE AGGREGATES: ASTM C33 - MAXIMUM SIZE OF CONCRETE AGGREGATE SHALL NOT EXCEED ONE (1) INCH SIZE SUITABLE FOR INSTALLATION METHOD UTILIZED OR ONE-THIRD (1/3) CLEAR DISTANCE BEHIND OR BETWEEN REINFORCING.

C. WATER: CLEAN AND NOT DETRIMENTAL TO CONCRETE.

D. AIR ENTRAINING ADMIXTURE: ASTM C260.

E. BONDING AGENT: LATEX EMULSION FOR BONDING NEW TO OLD CONCRETE AS MANUFACTURED BY DAYTON SUPERIOR.

F. NON-SHRINK GROUT: PREMIXED COMPOUND CONSISTING OF NONMETALLIC AGGREGATE, CEMENT, WATER REDUCING AND PLASTICISING AGENTS.

3. CONCRETE MIX

A. CONCRETE MATERIALS SHALL CONFORM TO THE APPROPRIATE A.C.I. REQUIREMENTS FOR EXPOSED STRUCTURAL CONCRETE.

B. MIX AND DELIVER CONCRETE IN ACCORDANCE WITH ASTM C94, ALT. 3.

C. PROPORTIONS OF CONCRETE MATERIALS SHALL BE SUITABLE FOR THE INSTALLATION METHOD UTILIZED AND SHALL RESULT IN DURABLE CONCRETE FOR LOCAL ANTICIPATED AGGRESSIVE ACTIONS. THE DURABILITY REQUIREMENTS OF ACI 318 CHAPTER 4 SHALL BE SATISFIED BASED ON THE CONDITIONS EXPECTED AT THE SITE. PROVIDE CONCRETE AS FOLLOWS:

1. COMPRESSIVE STRENGTH: 3000 PSI AT 28 DAYS.
(MIN. OR AS SPECIFIED IN STRUCTURAL DRAWINGS)

2. SLUMP: 4 INCHES

3. AIR ENTRAINMENT: 6%

PART 3 - EXECUTION

1. INSERTS, EMBEDDED COMPONENTS AND OPENINGS

A. THE CONTRACTOR SHALL COORDINATE AND CROSS-CHECK ARCHITECTURAL, BUILDING & ELECTRICAL DRAWINGS FOR OPENINGS, SLEEVES, ANCHORS, HANGERS, AND OTHER ITEMS RELATED TO CONCRETE WORK AND SHALL ASSUME FULL RESPONSIBILITY FOR THE PROPER LOCATION BEFORE PLACING CONCRETE.

B. PROVIDE FORMED OPENINGS WHERE REQUIRED FOR WORK TO BE EMBEDDED IN AND PASSING THROUGH CONCRETE MEMBERS.

C. COORDINATE WORK OF OTHER SECTIONS IN FORMING AND SETTING OPENING, SLOTS, RECESSES, CHASES, SLEEVES, BOLTS, ANCHORS, AND OTHER INSERTS.

D. INSTALL CONCRETE ACCESSORIES STRAIGHT, LEVEL AND PLUMB.

2. REINFORCEMENT PLACEMENT

A. PLACE REINFORCEMENT, SUPPORTED AND SECURED AGAINST DISPLACEMENT.

B. ENSURE REINFORCING IS CLEAN, FREE OF LOOSE SCALE, DIRT, OR OTHER FOREIGN COATINGS.

C. WELDING IS PROHIBITED ON REINFORCING STEEL AND EMBEDMENTS.

Edge Consulting Engineers, Inc.
624 Water Street
Prairie du Sac, WI 53578
608.644.1449 voice
608.644.1549 fax
www.edgeconsult.com

SPECIFICATIONS
JENNA DR [2877996]
VERONA, WISCONSIN

SHEET TITLE:

PRELIMINARY DWGS:	INI:
CD 90's V.1 - 03/31/2017	CV
STAMPED PERMIT DWGS:	
STAMPED FINAL DWGS:	
FINAL CDs V.1 - 07/12/2017	NAT

CHECKED BY: PCM

PLOT DATE: 7/12/2017

PROJECT #: 15154

FILE NAME: SP-1.dgn

SHEET NUMBER:

SP-1

I:\15100\15154\CAD\Plot\CD\SP-1.dgn

© EDGE CONSULTING ENGINEERS, INC.

D. MINIMUM CONCRETE COVER FOR REINFORCING SHALL BE THREE (3) INCHES UNLESS OTHERWISE NOTED.

E. CONCRETE COVER FROM TOP OF FOUNDATION TO ENDS OF VERTICAL REINFORCEMENT SHALL NOT EXCEED THREE (3) INCHES NOR BE LESS THAN TWO (2) INCHES.

3. PLACING CONCRETE

A. VIBRATE ALL CONCRETE.

B. ALL CONCRETE WORK SHALL ADHERE TO THE LATEST A.C.I. STANDARDS FOR WINTER POURING AND CURING PROCEDURES IF SEASONAL CONDITIONS APPLY.

4. CURING

A. AFTER PLACEMENT, PROTECT CONCRETE FROM PREMATURE DRYING.

B. MAINTAIN CONCRETE WITH MINIMAL MOISTURE LOSS AT RELATIVELY CONSTANT TEMPERATURE FOR A PERIOD NECESSARY FOR HYDRATION OF CEMENT AND HARDENING OF CONCRETE.

5. PROVIDE HAND RUBBED SMOOTH FINISH TO ALL EXPOSED VERTICAL FORMED CONCRETE SURFACES.

6. FIELD QUALITY CONTROL

A. SUBMIT THREE (3) CONCRETE TEST CYLINDERS - TAKEN FOR EVERY FIFTEEN (15) CUBIC YARD OR LESS. SUBMIT CONCRETE TESTS TO THE PROJECT MANAGER IN ACCORDANCE WITH ASTM , C-31 AND C-39.

B. SUBMIT ONE (1) ADDITIONAL TEST CYLINDER - TAKEN DURING COLD WEATHER POURS, AND CURED ON JOB SITE UNDER SAME CONDITIONS AS CONCRETE IT REPRESENTS.

C. SUBMIT ONE (1) SLUMP TEST - TAKEN FOR EACH SET OF TEST CYLINDERS TAKEN.

7. DEFECTIVE CONCRETE

MODIFY OR REPLACE CONCRETE NOT CONFORMING TO REQUIRED LINES, DETAILS OR ELEVATIONS AT COST OF GC, AS DIRECTED BY ARCHITECT/ENGINEER.

DIVISION 5: METALS

SECTION 05000 - METALS

PART 1 - GENERAL

1. SECTION INCLUDES

STRUCTURAL STEEL FRAMING MEMBERS, BASE PLATES, PLATES, BARS AND GROUTING UNDER BASE PLATES.

2. SUBMITTALS

SHOP DRAWINGS: INDICATE SIZES, SPACING, AND LOCATIONS OF STRUCTURAL MEMBERS, OPENINGS, CONNECTIONS, CAMBERS.

3. QUALITY ASSURANCE

A. FABRICATE STRUCTURAL STEEL MEMBERS IN ACCORDANCE WITH AISC SPECIFICATIONS FOR THE DESIGN, FABRICATION AND ERECTION OF STRUCTURAL STEEL FOR BUILDINGS.

B. PERFORM DESIGN UNDER DIRECT SUPERVISION OF A PROFESSIONAL STRUCTURAL ENGINEER LICENSED IN THE STATE.

PART 2 - PRODUCTS

1. MATERIALS:

A. STRUCTURAL STEEL MEMBERS:	ASTM A572, GRADE 50
B. STRUCTURAL TUBING:	ASTM A500, GRADE B
C. PIPE:	ASTM A53, TYPE E OR S, GRADE B
D. BOLTS, NUTS, AND WASHERS:	ASTM A325
E. ANCHOR BOLTS:	ASTM A307
F. WELDING MATERIALS:	AWS D1.1, TYPE REQUIRED FOR MATERIALS BEING WELDED
G. GROUT:	NON-SHRINK TYPE, PREMIXED COMPOUND CONSISTING OF NONMETALLIC AGGREGATE, CEMENT, WATER REDUCING AND PLASTICISING ADDITIVES, CAPABLE OF DEVELOPING A MINIMUM COMPRESSIVE STRENGTH OF 7000 PSI AT 28 DAYS.
H. SHOP AND TOUCH-UP PRIMER:	SSPC 15, TYPE 1, RED OXIDE
I. TOUCH-UP PRIMER FOR GALV. SURFACES:	ZINC RICH TYPE

2. FABRICATION: CONTINUOUSLY SEAL JOINTED MEMBERS BY CONTINUOUS WELDS. GRIND EXPOSED WELDS SMOOTH.

3. FINISH

A. PREPARE STRUCTURAL COMPONENT SURFACES IN ACCORDANCE WITH SSPC SP-1 TO SP-10 PROCEDURES.

B. STRUCTURAL STEEL MEMBERS SHALL BE HOT DIPPED GALVANIZED.

PART 3 - EXECUTION

1. EXAMINATION AND PREPARATION

VERIFY THAT THE FIELD CONDITIONS ARE ACCEPTABLE.

2. ERECTION:

A. ALLOW FOR ERECTION LOADS. PROVIDE TEMPORARY BRACING TO MAINTAIN FRAMING IN ALIGNMENT UNTIL COMPLETION OF ERECTION AND INSTALLATION OF PERMANENT BRIDGING AND BRACING.

B. FIELD WELD COMPONENTS INDICATED ON SHOP DRAWINGS.

C. DO NOT FIELD CUT OR ALTER STRUCTURAL MEMBERS WITHOUT APPROVAL OF THE ARCHITECT/ENGINEER.

D. AFTER ERECTION, TOUCH-UP WELDS, ABRASIONS, AND SURFACES NOT SHOP PRIMED OR GALVANIZED WITH TOUCH-UP PRIMERS AS SPECIFIED UNDER SECTION 05000 - METALS, PART 2 - PRODUCTS, H & I. SURFACES TO BE IN CONTACT WITH CONCRETE NOT INCLUDED.

3. FIELD QUALITY CONTROL

FIELD INSPECTION OF MEMBERS, CONNECTIONS, WELDS AND TORQUING.

DIVISION 16: ELECTRICAL

SECTION 16050 - BASIC ELECTRICAL MATERIALS AND METHODS

1. CONTRACTOR SHALL REVIEW THE CONTRACT DOCUMENTS PRIOR TO ORDERING THE ELECTRICAL EQUIPMENT AND STARTING THE ACTUAL CONSTRUCTION. CONTRACTOR SHALL ISSUE A WRITTEN NOTICE OF ALL FINDINGS TO THE ARCHITECT/ENGINEER LISTING ANY DISCREPANCIES OR CONFLICTING INFORMATION.

2. ELECTRICAL PLANS, DETAILS AND DIAGRAMS ARE DIAGRAMMATIC ONLY. VERIFY EXACT LOCATIONS AND MOUNTING HEIGHTS OF ELECTRICAL EQUIPMENT WITH OWNER PRIOR TO INSTALLATION.

3. EACH CONDUCTOR OF EVERY SYSTEM SHALL BE PERMANENTLY TAGGED IN EACH PANELBOARD, PULLBOX, JUNCTION BOX, SWITCH BOX, ETC. THE TYPE OF TAGGING METHODS SHALL BE IN COMPLIANCE WITH OCCUPATIONAL SAFETY AND HEALTH ADMINISTRATION (O.S.H.A.).

4. ALL MATERIALS AND EQUIPMENT SHALL BE NEW AND IN GOOD WORKING CONDITION WHEN INSTALLED AND SHALL BE OF THE BEST GRADE AND OF THE SAME MANUFACTURER THROUGHOUT FOR EACH CLASS OR GROUP OF EQUIPMENT. MATERIALS SHALL BE LISTED "J" WHERE APPLICABLE. MATERIALS SHALL MEET WITH APPROVAL OF ALL GOVERNING BODIES HAVING JURISDICTION. MATERIALS SHALL BE MANUFACTURED IN ACCORDANCE WITH APPLICABLE STANDARDS ESTABLISHED BY ANSI, NEMA, NBFU AND "UL" LISTED.

5. ALL CONDUIT SHALL HAVE A PULL CORD.

6. PROVIDE PROJECT MANAGER WITH ONE SET OF COMPLETE ELECTRICAL "AS INSTALLED" DRAWINGS AT THE COMPLETION OF THE JOB, SHOWING ACTUAL DIMENSIONS, ROUTINGS, AND CIRCUITS.

7. ALL CIRCUIT BREAKERS, FUSES AND ELECTRICAL EQUIPMENT SHALL HAVE AN INTERRUPTING SHORT CIRCUIT CURRENT TO WHICH THEY MAY BE SUBJECTED, AND A MINIMUM OF 10,000 A.I.C.

8. THE ENTIRE ELECTRICAL INSTALLATION SHALL BE GROUNDED AS REQUIRED BY UBC, NEC AND ALL APPLICABLE CODES.

9. PATCH, REPAIR AND PAINT ANY AREA THAT HAS BEEN DAMAGED IN THE COURSE OF THE ELECTRICAL WORK.

10. PLASTIC PLATES FOR ALL SWITCHES, RECEPTACLES, TELEPHONE AND BLANKED OUTLETS SHALL HAVE ENGRAVED LETTERING WHERE INDICATED ON THE DRAWINGS. WEATHERPROOF RECEPTACLES SHALL HAVE SIERRA #WPD-8 LIFT COVERPLATES.

SECTION 16400 - SERVICE AND DISTRIBUTION

1. WIRE AND CABLE CONDUCTORS SHALL BE COPPER, 600V, TYPE THHN OR THWN, WITH A MIN. SIZE OF #12 AWG, COLOR CODED. ALL RECTIFIER DROPS SHALL BE STRANDED TO ACCEPT CRIMP CONNECTORS.

2. ALL CHEMICAL GROUND RODS SHALL BE "UL" APPROVED.

3. METER SOCKET AMPERES, VOLTAGE, NUMBER OF PHASES SHALL BE AS NOTED ON THE DRAWINGS. MANUFACTURED BY MILBANK

4. CONDUIT

A. RIGID CONDUIT SHALL BE U.L. LABEL GALVANIZED ZINC COATED WITH GALVANIZED ZINC INTERIOR AND SHALL BE USED WHEN INSTALLED IN OR UNDER CONCRETE SLABS, IN CONTACT WITH THE EARTH, UNDER PUBLIC ROADWAYS, IN MASONRY WALLS OR EXPOSED ON BUILDING EXTERIOR. RIGID CONDUIT IN CONTACT WITH EARTH SHALL BE 1/2 LAPPED WRAPPED WITH HUNTS WRAP PROCESS NO. 3.

B. ELECTRICAL METALLIC TUBING SHALL HAVE U.L. LABEL. FITTING SHALL BE GLAND RING COMPRESSION TYPE.

C. FLEXIBLE METALLIC CONDUIT SHALL HAVE U.L. LISTED LABEL AND MAY BE USED WHERE PERMITTED BY CODE. FITTINGS SHALL BE "JAKE" OR "SQUEEZE" TYPE. ALL FLEXIBLE CONDUITS SHALL HAVE FULL LENGTH GROUND WIRE.

D. ALL UNDERGROUND CONDUIT SHALL BE AS NOTED ON THE DRAWINGS AT A MINIMUM DEPTH OF 42" BELOW GRADE. IT IS REQUIRED AND WILL BE THE RESPONSIBILITY OF THE ELECTRICAL CONTRACTOR TO NOTIFY THE STATE "ONE-CALL" SYSTEM AT LEAST FORTY-EIGHT (48) HOURS PRIOR TO DIGGING OR AS REQUIRED BY LOCATOR.

5. CONTRACTOR TO COORDINATE WITH UTILITY COMPANY FOR CONNECTION OF TEMPORARY AND PERMANENT POWER TO THE SITE. ALL COSTS TO BE PAID BY THE CONTRACTOR.

6. ALL ELECTRICAL EQUIPMENT SHALL BE LABELED WITH PERMANENT ENGRAVED PLASTIC LABELS WITH WHITE ON BLUE BACKGROUND LETTERING (MINIMUM LETTER HEIGHT SHALL BE 1/4-INCH). NAMEPLATES SHALL BE FASTENED WITH STAINLESS STEEL SCREWS, NOT ADHESIVE.

7. UPON COMPLETION OF WORK, CONDUCT CONTINUITY, SHORT CIRCUIT, AND FALL POTENTIAL GROUNDING TESTS BY AN INDEPENDENT TESTING SERVICE ENGAGED BY THE CONTRACTOR. SUBMIT TEST REPORTS TO PROJECT MANAGER. CLEAN PREMISES OF ALL DEBRIS RESULTING FROM WORK AND LEAVE WORK IN A COMPLETE AND UNDAMAGED CONDITION.

8. GROUNDING ELECTRODE SYSTEM

A. PREPARATION

1. SURFACE PREPARATION ALL CONNECTIONS SHALL BE MADE TO BARE METAL. ALL PAINTED SURFACES SHALL BE FIELD INSPECTED AND MODIFIED TO ENSURE PROPER CONTACT. NO WASHERS ARE ALLOWED BETWEEN THE ITEMS BEING GROUNDED. ALL CONNECTIONS ARE TO HAVE A AGENT APPLIED PRIOR TO INSTALLATION.

2. GROUND BAR PREPARATION ALL COPPER GROUND BARS SHALL BE CLEANED, POLISHED AND A NON-OXIDIZING AGENT APPLIED. NO FINGERPRINTS OR DISCOLORED COPPER WILL BE PERMITTED.

3. SLEEVES ALL GROUNDING CONDUCTORS SHALL RUN THROUGH PVC SLEEVES WHEREVER CONDUCTORS RUN THROUGH WALLS, FLOORS THROUGH EMT. BOTH ENDS OF CONDUIT SHALL BE GROUNDED. SEAL BOTH ENDS OF CONDUIT WITH SILICONE CAULK.

B. GROUND BARS

1. ALL GROUND BARS SHALL BE 1/4-INCH THICK TINNED COPPER PLATE AND OF SIZE INDICATED ON DRAWINGS.
2. ALL CONNECTIONS TO THE GROUND BAR SHALL OBSERVE THE FOLLOWING SEQUENCE
   A. BOLT-HEAD
   B. 2-HOLE LUG
   C. TINNED COPPER BUSS BAR
   D. STAR WASHER
   E. NUT

C. EXTERNAL CONNECTIONS

1. ALL BURIED GROUNDING CONNECTIONS SHALL BE MADE BY THE EXOTHERMIC WELD PROCESS. CONNECTIONS SHALL INCLUDE ALL CABLE TO CABLE SPLICES, TEE'S, CROSSES, ETC. ALL CABLE TO GROUND RODS, GROUND ROD SPLICES AND LIGHTNING PROTECTION SYSTEMS ARE TO BE AS INDICATED. ALL MATERIALS USED (MOLDS, WELDING METAL, TOOLS, ETC.) SHALL BE BY "CADWELD" AND INSTALLED PER MANUFACTURER'S RECOMMENDED PROCEDURES.

2. ALL ABOVE GRADE GROUNDING AND BONDING CONDUCTORS SHALL BE CONNECTED BY TWO HOLE CRIMP TYPE (COMPRESSION) CONNECTIONS (EXCEPT FOR THE ACEG AND GROUND ROD) MECHANICAL CONNECTIONS, FITTINGS OR CONNECTIONS THAT DEPEND SOLELY ON SOLDER SHALL NOT BE USED. ALL CABLE TO CABLE CONNECTIONS SHALL BE HIGH PRESSURE DOUBLE CRIMP TYPE CONNECTIONS.

D. GROUND RODS ALL GROUND RODS SHALL BE 5/8-INCH DIAMETER x 10'-0" LONG "COPPERWELD" OR APPROVED EQUAL OF THE NUMBER AND LOCATIONS INDICATED. GROUND RODS SHALL BE DRIVEN FULL LENGTH VERTICAL IN UNDISTURBED EARTH.

E. GROUND CONDUCTORS

ALL GROUND CONDUCTORS SHALL BE STANDARD TINNED SOLID BARE COPPER ANNEALED, AND OF SIZE INDICATED ON DRAWINGS UNLESS NOTED OTHERWISE.

F. LUGS

1. LUGS SHALL BE 2-HOLE, LONG BARREL, STRAND COPPER UNLESS OTHERWISE SPECIFIED IN THE CONTRACT DOCUMENTS. LUGS SHALL BE THOMAS AND BETTS SERIES #548 OR EQUIVALENT BENDING.

A.	535 MCM DLO	54880BE
B.	262 MCM DLO	54872BE
C.	#1/0 DLO	54862BE
D.	#4/0 THWN AND BARE	54866BE
E.	#2/0 THWN	54862BE
F.	#2 THHN	54207BE
G.	#6 DLO	54205BE

2. WHEN THE DIRECTION OF THE CONDUCTOR MUST CHANGE, IT SHALL BE DONE GRADUALLY. THE CURVATURE OF THE TURN SHALL BE DONE IN ACCORDANCE WITH THE FOLLOWING CHART:

GROUNDING CONDUCTOR SIZE	RADIUS TO INSIDE EDGE
NO. 6 AWG TO NO. 4 AWG	6 INCHES
NO. 2 AWG TO NO. 1/0 AWG	8 INCHES
NO. 2/0 AWG TO 4/0 MCM	12 INCHES
250 MCM TO 750 MCM	24 INCHES

G. GROUND RING

1. THE EXTERNAL GROUND RING ENCIRCLING THE TOWER (IF APPLICABLE) AND THE EQUIPMENT SHELTER OR PLATFORM/SKID SHALL BE MINIMUM NO. 2 A.W.G. SOLID TINNED BARE COPPER CONDUCTOR IN DIRECT CONTACT WITH THE EARTH AT THE DEPTH INDICATED ON THE DRAWINGS. CONDUCTOR BENDS SHALL HAVE A MINIMUM BENDING RADIUS OF EIGHT (8) INCHES.

2. ALL EXTERNAL GROUND RINGS ARE TO BE JOINED TOGETHER AND ALL CONNECTIONS MUST BE CADWELDED. NO LUGS OR CLAMPS WILL BE ACCEPTED.

H. FENCE/GATE

GROUND EACH GATE POST, CORNER POST AND GATE AS INDICATED ON THE DRAWINGS. GROUND CONNECTIONS TO FENCE POSTS AND ALL OTHER CONNECTIONS FOR THE GROUND GRID SYSTEM SHALL BE MADE BY EXOTHERMIC WELD PROCESS, AND INSTALLED PER MANUFACTURER'S RECOMMENDATIONS AND PROCEDURES, AND SPRAYED WITH COLD-GALVANIZED PAINT.

9. I.E.E.E. FALL POTENTIAL TESTS

A. FOR RAW LAND SITE

1. GROUND TESTS SHALL BE PERFORMED AS INDICATED ON DRAWINGS. A BIDDLE GROUND OHMER OR THE METHOD OF USING TWO AUXILIARY GROUND RODS (AS DESCRIBED IN I.E.E.E. STANDARDS NO. 81-1983, PART 1) MAY BE USED. THE I.E.E.E. METHOD REQUIRES THE USE OF AN A.C. TEST CURRENT. THE AUXILIARY TEST RODS MUST BE SUFFICIENTLY FAR AWAY FROM THE ROD UNDER TEST SO THAT THE REGIONS IN WHICH THEIR RESISTANCE IS LOCALIZED DO NOT OVERLAP. THE TEST POINT WILL BE THE GROUND ROD AND WILL CONSIST OF THE THREE POINT FALL OF POTENTIAL MEGGER TEST METHOD, USING THE BIDDLE NULL-BALANCE EARTH TESTER (MEGGER #250220-2, OR EQUIVALENT)

2. CONTRACTOR TO CONDUCT GROUND RESISTANCE TEST IN THE FORMAT AS FOLLOWS:

B. EQUIPMENT PAD

1. FIRST TEST - SHALL BE WITH FOUR (4) GROUND RODS INSTALLED. ONE AT EACH CORNER OF THE PAD BUT NOT CONNECTED TO THE MAIN GROUNDING BUS. FURNISH WIRE TO CONNECT (TEMPORARY CLAMP) ALL FOUR (4) GROUND RODS TOGETHER TO MAKE A SYSTEM TEST AFTER EACH ROD IS INDIVIDUALLY TESTED. IF ANY INDIVIDUAL ROD TESTS 25 OHMS OR MORE, THE ELECTRICAL CONTRACTOR AND OWNER'S REPRESENTATIVE SHOULD BE NOTIFIED SO THAT THE ROD CAN BE DRIVEN DEEPER UNTIL ALL FOUR (4) RODS HAVE A RESISTANCE OF 10 OHMS OR LESS ON A DRY DAY.

2. SECOND TEST - SHALL BE WITH THE GROUND RODS CONNECTED, WITH DRY SOIL AND WHEN NO STANDING WATER HAS BEEN PRESENT FOR THE PAST TEN (10) DAYS. THE MAXIMUM ALLOWABLE READING IS 5 OHMS TO GROUND. IF THE RESISTANCE OF THE ENTIRE SYSTEM EXCEEDS 5 OHMS, NOTIFY THE CONTRACTOR AND OWNER'S REPRESENTATIVE SO THAT ADDITIONAL AND/OR DEEPER RODS CAN BE INSTALLED.

C. TOWER

1. FIRST TEST - SHALL BE WITH THREE (3) GROUND RODS INSTALLED (MINIMUM), EQUALLY SPACED AROUND THE TOWER FOUNDATION, BUT NOT CONNECTED TO THE SHELTER/PLATFORM/SKID PAD EXTERNAL GROUND RING FURNISH WIRE TO CONNECT (TEMPORARY CLAMP) ALL THREE (3) GROUND RODS TOGETHER TO MAKE A SYSTEM TEST AFTER EACH ROD IS INDIVIDUALLY TESTED. IF ANY INDIVIDUAL ROD TESTS 25 OHMS OR MORE, NOTIFY THE CONTRACTOR AND OWNER'S REPRESENTATIVE SO THAT THE ROD CAN BE DRIVEN DEEPER UNTIL ALL THREE (3) RODS HAVE A RESISTANCE OF 10 OHMS OR LESS ON A DRY DAY.

2. SECOND TEST - SHALL BE WITH THE GROUND RODS CONNECTED, WITH DRY SOIL AND WHEN NO STANDING WATER HAS BEEN PRESENT FOR THE PAST TEN (10) DAYS . THE MAXIMUM ALLOWABLE READING IS 5 OHMS TO GROUND. IF THE RESISTANCE OF THE ENTIRE SYSTEM EXCEEDS 5 OHMS, THE ELECTRICAL CONTRACTOR AND OWNER'S REPRESENTATIVE SHOULD BE NOTIFIED SO THAT EITHER ADDITIONAL AND/OR DEEPER RODS CAN BE INSTALLED.

D. EQUIPMENT PAD AND TOWER

1. AFTER THE EQUIPMENT PAD AND TOWER GROUND RESISTANCE TEST IS COMPLETED, CONTRACTOR SHALL TIE EQUIPMENT PAD EXTERNAL GROUND RING AND TOWER EXTERNAL GROUND RING TOGETHER. AFTER FIRST AND SECOND TEST ALL CONNECTIONS MUST BE MADE USING EXOTHERMIC WELD. NO LUGS OR CLAMPS WILL BE ACCEPTED.

2. AFTER ALL THE EXTERNAL GROUND RINGS ARE TIED TOGETHER, COMPLETE A MEGGER CHECK OF THE GROUND SYSTEM. THE MAXIMUM ALLOWABLE READING IS 5 OHMS TO GROUND.

10. GROUNDING RESISTANCE TEST REPORT

UPON COMPLETION OF THE TESTING FOR EACH SITE, A TEST REPORT SHOWING RESISTANCE IN OHMS WITH AUXILIARY POTENTIAL ELECTRODES AT 5 FEET AND 10 FEET INTERVALS UNTIL THE AVERAGE RESISTANCE STARTS INCREASING AND ALSO NOTE THAT 10-15 PHOTOS MUST BE TAKEN TO PROOF ENTIRE EXTERNAL GROUND RING SYSTEM BEFORE BACKFILL. TWO (2) SETS OF TEST DOCUMENTS ARE OF THE INDEPENDENT TESTING SERVICE TO BE BOUND AND SUBMITTED WITHIN ONE (1) WEEK OF WORK COMPLETION.

SECTION 16503 - POLES, POSTS, AND STANDARDS

1. GENERAL

A. LIGHTNING ROD AND EXTENSION PIPE INCLUDING ALL APPURTENANCES, TO BE FURNISHED BY OWNER, IF REQUIRED.

B. PROVIDE TEMPORARY LIGHTING FOR TOWER AS PER FAA REGULATIONS DURING CONSTRUCTION, IF REQUIRED.

C. GROUNDING

GROUND TOWER WITH A MINIMUM OF #2 AWG TINNED SOLID BARE COPPER CONDUCTOR CADWELDED TO TABS (IF PRESENT). TWO (2) GROUNDING LEADS PER TOWER. NO EXOTHERMIC WELDS SHALL BE ATTACHED DIRECTLY TO THE TOWER STEEL.

SECTION 16745 - TELECOMMUNICATIONS WIRING COMPONENTS (COAXIAL ANTENNA CABLE)

1. GENERAL

A. ALL MATERIALS, PRODUCTS OR PROCEDURES INCORPORATED INTO WORK SHALL BE NEW AND OF STANDARD COMMERCIAL QUALITY.

B. CERTAIN MATERIALS AND PRODUCTS WILL BE SUPPLIED BY THE OWNER (REFER TO GENERAL CONDITIONS FOR THE LIST OF OWNER FURNISHED EQUIPMENT, MATERIALS AND SUPPLIES FOR THESE ITEMS). THE CONTRACTOR IS RESPONSIBLE FOR PICKUP AND DELIVERY OF ALL SUCH MATERIALS.

C. ALL OTHER MATERIALS AND PRODUCTS SPECIFIED IN THE CONTRACT DOCUMENTS SHALL BE SUPPLIED BY THE CONTRACTOR.

2. MATERIALS:

A. COAXIAL CABLE:

1. INSTALL COAXIAL CABLE AND TERMINATIONS BETWEEN ANTENNAS AND EQUIPMENT PER MANUFACTURER'S RECOMMENDATIONS WITH COAXIAL CABLES SUPPORTED AT NO MORE THAN 3'-0" O.C. WEATHERPROOF ALL CONNECTORS BETWEEN THE ANTENNA AND EQUIPMENT PER MANUFACTURERS' REQUIREMENTS. TERMINATE ALL COAXIAL CABLE THREE (3) FEET IN EXCESS OF EQUIPMENT LOCATION UNLESS OTHERWISE STATED.
2. ALL COAX RUNS SHALL BE 1-5/8" UNLESS OTHERWISE INDICATED.

3. ANTENNA AND COAXIAL CABLE GROUNDING
   A. ALL COAXIAL CABLE GROUNDING KITS ARE TO BE INSTALLED ON STRAIGHT RUNS OF COAXIAL CABLE (NOT WITHIN BENDS)

4. COAXIAL CABLE IDENTIFICATION
   A. TO PROVIDE EASY IDENTIFICATION AND UNIFORM MARKING OF ANTENNA CABLING, MARK CABLE:
      1. FIRST LOCATION IS AT THE END OF THE COAX NEAREST THE ANTENNA (WHERE THE COAXIAL CABLE AND JUMPER ARE CONNECTED).
      2. SECOND LOCATION IS INSIDE THE EQUIPMENT SHELTER NEAR THE WAVEGUIDE ENTRY PORT OR BEFORE TERMINATION ON EXTERIOR SITES.

5. TESTING

IF REQUESTED BY CONSTRUCTION MANAGER, LESSEE SHALL PROVIDE AN INDEPENDENT TESTING AGENCY TO PERFORM THE COAXIAL SWEEP TEST & REPORT. THE CONTRACTOR SHALL PROVIDE ONE CLIMBER / QUALIFIED PERSONNEL TO ASSIST IN ANY REPAIRS AND WEATHERPROOFING ONCE THE TEST IS COMPLETE. THE CONTRACTOR SHALL PROVIDE LESSEE WITH A MINIMUM OF FORTY-EIGHT (48) HOURS NOTICE PRIOR TO THE TIME OF THE SWEEP TEST.

Edge
Consulting Engineers, Inc.
624 Water Street
Prairie du Sac, WI 53578
608.644.1449 voice
608.644.1549 fax
www.edgeconsult.com

SPECIFICATIONS
JENNA DR [2887996]
VERONA, WISCONSIN

SHEET TITLE:

PRELIMINARY DWGS:	INT:
CD 90's V.1 - 03/31/2017	CV
STAMPED PERMIT DWGS:	
STAMPED FINAL DWGS:	
FINAL CDs V.1 - 07/12/2017	NAT

CHECKED BY: PCM
PLOT DATE: 7/12/2017
PROJECT #: 15154
FILE NAME: SP-2.dgn
SHEET NUMBER: SP-2

I:\15100\15154\CAD\Plot\CD\SP-2.dgn

© EDGE CONSULTING ENGINEERS, INC.

PROPOSED ACCESS DRIVE

LOOKING WEST FROM SPRING ROSE ROAD

EXISTING SITE OVERVIEW

LOOKING SOUTH FROM NORTH OR PROPOSED COMPOUND LOCATION

APPROX. PROPOSED COMPOUND LOCATION

LOOKING NORTHWEST FROM SOUTHWEST SIDE OF PROPOSED COMPOUND LOCATION

APPROX. PROPOSED LESSEE LEASE AREA LOCATION

LOOKING NORTHEAST FROM SOUTHWEST CORNER OF PROPOSED COMPOUND LOCATION

Edge
Consulting Engineers, Inc.
624 Water Street
Prairie du Sac, WI 53578
608.644.1449 voice
608.644.1549 fax
www.edgeconsult.com

SITE PHOTOS
JENNA DR [2887996]
VERONA, WISCONSIN

SHEET TITLE:

PRELIMINARY DWGS:	INI:
CD 90's V.1 - 03/31/2017	CV
STAMPED PERMIT DWGS:	
STAMPED FINAL DWGS:	
FINAL CDs V.1 - 07/12/2017	NAT

CHECKED BY:
PCM

PLOT DATE:
7/12/2017

PROJECT #:
15154

FILE NAME:
P-1.dgn

SHEET NUMBER:
P-1

I:\15100\15154\CAD\Plot\CD\P-1.dgn

© EDGE CONSULTING ENGINEERS, INC.